2017

Guidance for Approval of Manufacturing Process and Type Approval, Etc.

GC-01-E

KR

APPLICATION OF "Guidance for Approval of Manufacturing Process and Type Approval, Etc."

1. Unless expressly specified otherwise, the requirements in the Guidance apply to ships for which contracts for construction are signed on or after 1 July 2017.
2. The amendments to the Guidance for 2016 edition and their effective date are as follows;

Effective Date 1 July 2016 (based on the application date for certification of product, Related Circular No. : 2016-6-E)

CHAPTER 3 TYPE APPROVAL

Section 1 General

- 102. 3 (2) (i) has been newly added.

Effective Date 1 July 2016 (based on the application date for certification of product, Related Circular No. : 2016-7-E)

CHAPTER 1 GENERAL

Section 2 Definitions

- 205. has been amended.

CHAPTER 3 TYPE APPROVAL

Section 11 Exhaust Gas Turbochargers

- 1102. has been amended. (1 and 2 have been moved to Pt 5 Ch 1 211.)

CHAPTER 6 MANUFACTURER APPROVAL

Section 1 General

- 101. 1 and 2 have been amended.
- 102. 3 (6) has been moved to Pt 5 Ch 1 211.

Effective Date 1 January 2017 (based on contract date for shipbuilding or on application date for certification of product, Related Circular No. : 2016-15-E)

CHAPTER 2 APPROVAL OF MANUFACTURING PROCESS

Section 4 Castings and Steel Forgings

- 405. 4 has been newly added.

CHAPTER 3 TYPE APPROVAL

Section 34 Fiber Reinforced Plastic Gratings

- 3403. 2 has been amended.
- Table 3.34.1 of 3403. has been amended.

Effective Date 1 July 2017 (based on contract date for shipbuilding/offshore/single point moorings or on application date for certification of product)

CHAPTER 2 APPROVAL OF MANUFACTURING PROCESS

Section 2-1 Rolled Steels

- Table 2.2.1 has been amended.

Section 2-6 High Strength Steels for Welded Structures

- has been newly established.

Section 10-3 Offshore Chains and Chain Accessories

- 1022. 3 has been amended.
- 1023. 2 (6) (E) (d) has been amended.
- 1023. 2 (6) (E) (j) has been newly added.
- 1023. 3 (2) has been newly added.
- Table 2.10.3 of 1023. has been amended.
- 1025. has been newly added.
- 1026. 2 has been newly added.
- 1026. 3, 5, 6 have been amended.

Effective Date 1 July 2017 (based on the application date for certification of product)

CHAPTER 2 APPROVAL OF MANUFACTURING PROCESS

Section 1 General

- 102. 2 (1) has been amended.
- 102. 2 (2) (C) (a) has been amended.
- 102. 2 (2) (D) (c) and (d) have been newly added.
- 105. 2 has been amended.

CHAPTER 3 TYPE APPROVAL

Section 15 Machinery and Equipment for Ships

- 1501.2 has been newly added.
- Table 3.15.1 has been amended.

Section 16 Plastic Piping System

- 1601~1604 have been amended.

Section 18 Mechanical Joints

- Table 3.18.1 has been amended.

- Table 3.18.2 has been amended.

CHAPTER 4 DESIGN APPROVAL

Section 2 Loading Instrument Program

- 202. (3) has been amended.
- 203. 4 has been amended.

Annex 1 Approval Certificate for Manufacturing Process

- has been amended.

Annex 2 Type Approval Certificate

- has been amended.

Annex 3 Design Approval Certificate

- has been amended.

Annex 4 Approval Certificate for Quality Assurance System

- has been amended.

Annex 5 Approval Certificate for Manufacturer

- has been amended.

Effective Date 1 July 2017

CHAPTER 3 TYPE APPROVAL

Section 8 Diesel Engines

- 801. 4 (7) has been amended.

CONTENTS

CHAPTER 1. GENERAL ····· 1

Section 1. General ····· 1

Section 2. Definitions ····· 2

CHAPTER 2. APPROVAL OF MANUFACTURING PROCESS ····· 3

Section 1. General ····· 3

Section 2-1. Rolled Steels ····· 8

Section 2-2. Semi Finished Products for Rolled Steels ····· 16

Section 2-3. Rolled Steels intended for welding with high heat input ····· 18

Section 2-4. YP47 Steel Plates ····· 20

Section 2-5. Hull Structural Steels with Improved Fatigue Properties ····· 22

Section 2-6. High Strength Steels for Welded Structures ····· 25

Section 3. Steel Tubes and Pipes ····· 32

Section 4. Castings and Steel Forgings ····· 34

Section 5. Crankshafts under special requirements ····· 37

Section 6. Aluminium Alloys ····· 40

Section 7-1. Copper Alloy Castings ····· 43

Section 7-2. Copper and Copper Alloy Tubes ····· 44

Section 8. Special Cast Iron Valves ····· 48

Section 9. Anchors ····· 49

Section 10-1. Marine Chains ····· 50

Section 10-2. Marine Chain Accessories ····· 53

Section 10-3. Offshore Chains and Chain Accessories ····· 55

Section 11. Wire Rope ····· 62

Section 12. Synthetic Fibre Ropes ····· 64

Section 13. FRP Ships ····· 67

Section 14. Boiler and Pressure Vessel ····· 70

CHAPTER 3. TYPE APPROVAL ····· 71

Section 1. General ····· 71

Section 2. Welding Materials ····· 76

Section 3-1. Anti-corrosive Paints ····· 78

Section 3-2. Non-slip Paints ····· 82

Section 4. Acid Resisting Paints ····· 84

Section 5. Loading Instruments ····· 86

Section 6. High Holding Power Anchors and Super High Holding Power Anchors ····· 87

Section 7-1. Emergency Towing Arrangements ····· 89

Section 7-2. Equipment for mooring at SPM ····· 91

Section 8. Diesel Engines ····· 93

Section 9. Crankcase Explosion Relief Valves ····· 99

Section 10. Crankcase Oil Mist Detection Arrangements ····· 105

Section 11. Exhaust Gas Turbochargers ····· 109

Section 12. Hydraulic Motors and Hydraulic Pumps ····· 110

Section 13. Air Compressors ····· 111
Section 14. Safety Valves ····· 112
Section 15. Machinery and Equipment for Ships ····· 117
Section 16. Plastic Pipes ····· 122
Section 17. Flexible Hose Assembly ····· 125
Section 18. Mechanical Joints ····· 127
Section 19. Air Pipe Automatic Closing Devices ····· 133
Section 20. Level Indicators ····· 137
Section 21. Electrical Equipment and Cables ····· 138
Section 22. Cable Laying ····· 146
Section 23. Automatic and Remote Control Systems ····· 150
Section 24. Equipment related to Ventilation Systems in Oil Tankers ····· 162
Section 25. Securing Devices ····· 171
Section 26. Fire Protection Materials ····· 173
Section 27. Materials for Refrigerated Chambers and Oil-impervious Composition ·· 204
Section 28. Materials of Reinforced Plastics ····· 210
Section 29. Water Level Detection and Alarm System ····· 216
Section 30. Protective Coating Systems ····· 218
Section 31. LED lighting fittings ····· 226
Section 32. Corrosion Resistant Steels ····· 227
Section 33. Protective Coating Systems for Cargo Oil Tanks ····· 236
Section 34. Fiber Reinforced Plastic Gratings ····· 243

CHAPTER 4. DESIGN APPROVAL ····· 249
Section 1. General ····· 249
Section 2. Loading Instrument Program ····· 252
Section 3. Container Lashing calculation program ····· 255

CHAPTER 5. APPROVAL OF QUALITY ASSURANCE SYSTEM ····· 257
Section 1. General ····· 257
Section 2. Assessment ····· 259
Section 3. Approval ····· 260
Section 4. Requirements of Quality Assurance System ····· 262

CHAPTER 6. MANUFACTURER APPROVAL ····· 271
Section 1. General ····· 271
Section 2. Assessment ····· 272
Section 3. Approval ····· 273

<ANNEX>
1. Approval Certificate for Manufacturing Process ····· 275
2. Type Approval Certificate ····· 276
3. Design Approval Certificate ····· 277
4. Approval Certificate for Quality Assurance System ····· 278
5. Approval Certificate for Manufacturer ····· 279
6. Application Form for Approval ····· 280

CHAPTER 1 GENERAL

Section 1 General

101. Purpose

The purpose of this Guidance for Approval of Manufacturing Process and Type Approval, etc. (hereinafter referred to as **the Guidance**), is to specify the procedure for approval of the manufacturing process and type approval, etc., for the materials and equipment for marine use delivered from manufacturing plants as finished products in the course of examinations of the construction, materials, scantlings and workmanship of the hull, equipment and machinery required by **Pt 1, Ch 1, 301.** of the Rules for Classification of Steel Ships (hereinafter referred to as **the Rules**) and other technical rules, excluding the examinations for hull outfitting work and machinery assembly and installation work carried out at shipyards. Also, this Guidance is to describe the procedure for the certification of the quality system applied to the supplier.

102. Application

1. The Guidance, in principle, applies to tests and inspections of materials and equipment for marine use which are, in advance, to be subjected to the approval by the Society in accordance with the requirements specified in the Rules and the Guidance relating to the Rules for the Classification of Steel Ship and other technical rules.

2. The materials and equipment other than those specified in the Guidance may, where deemed appropriate by the Society, be approved in accordance with the Korean Industrial Standards (hereinafter referred to as the **KS**), the applicable Codes, the manufacturer's specifications or equivalent thereto upon the request of manufacturer.

Section 2 Definitions

201. Approval of manufacturing process

Approval of manufacturing process is, on condition that the uniform quality of the products can be assured, to certify for the manufacturers that the manufacturing process complies with the requirements in **Pt 2, Ch 1, 102.** of the Rules and/or the relevant standards, where deemed satisfactory by the Society as results of carrying out the examination, tests and inspections specified in the Guidance prior to commencement of production and test of the product.

202. Type approval

Type approval is to certify for the manufacturers of the materials and equipment for marine use that the materials and equipment comply with the provisions for the type approved products in the Guidance, where deemed satisfactory by the Society as the results of carrying out the examination, tests and inspection specified in the Guidance before installation on board.

203. Design approval

Design approval is to certify for the manufacturers that the drawings and documents specifying the particulars, construction, dimensions and materials of equipment for marine use may be dealt with as the standard design by conducting the approval of these drawings in advance, based on the requirements in **Pt 5, 6** and **9** of the Rules and other technical rules.

204. Approval of quality assurance system

Approval of a quality assurance system is to certify for the manufacturers that their quality system complies with the requirements in the Guidance, where deemed satisfactory by the Society as the result of carrying out the plant audit specified in the Guidance and evaluating the capability of a quality assurance of the manufacturers, as suppliers.

205. Manufacturer approval

Manufacturer approval is to certify for the manufacturer who carry out a plant audit and being satisfied, in relation to manufacturing process and their quality system for the manufacturers of products (paints, fire protection materials, etc.) which are type approved but not subject to individual product inspection, or for the engine manufacturer, or for the manufacturer who intend to issue Work's certificate (W) in accordance with **Pt 5** of the Rules. *(2017)* ⚓

CHAPTER 2 APPROVAL OF MANUFACTURING PROCESS

Section 1 General

101. Application

1. The requirements in this Chapter apply to the procedure and tests for the approval of manufacturing process of the materials in accordance with the requirements in **Pt 2, Ch 1** and **Pt 4, Ch 8** of the Rules.

2. Of those materials to be approved by the Society in accordance with the requirements in **Pt 2, Ch 1, 102. 2** of the Rules, the requirements in this Chapter correspondingly apply to the procedure and tests for the approval of manufacturing process of the materials.

3. The manufacturers wishing to obtain the approval of manufacturing process are to comply with the requirements specified in the relevant Section of this Chapter according to the kind of materials in addition to the requirement for the procedure and tests specified in this Section.

102. Approval application

1. The manufacturer wishing to obtain the approval of manufacturing process is to submit a copy of the application of approval for manufacturing process (refer to **Annex 6**) of the Society together with three copies of the required data for the approval and two copies of the required data for reference to the Society.

2. Data to be submitted

(1) Data for approval
The following reference data are to be submitted to the Society. Where test methods and procedure are specified into this Guidance, **IMO Res.**, **KS** standard, etc., the data to indicate the related standard instead of this required data may be submitted except detail drawings of test specimens. *(2017)*
(A) Test plan for the approval of manufacturing process *(2017)*
(a) Material grade
(b) Thickness, weight and specification of products
(c) Test items, test method and Acceptance criteria
(d) Location for test
(e) The location and direction of specimens
(f) Thickness and specification of specimens
(B) Applicable standard, codes or rules relevant to (A), if applicable *(2017)*
(2) Data for reference
(A) Details of products information
(a) Type of products, grade of steel, thickness and specification of products
(B) Outline of workshops
(a) Name and address of the manufacturer, history, layout and dimension of works
(C) Organization and quality
(a) Organizational chart and number of staff employed *(2017)*
(b) Staff employed and organization of the quality control department
(c) Certification of compliance of the quality system with **IS0 9001** and/or approval certificates already granted by other Classification Societies, if any.
(D) Outline of manufacturing process and facilities
(a) Flow chart of the manufacturing process including quality control process on each manufacturing stage.
(b) Manufacturing facilities and equipment
(c) Origin and storage of raw material *(2017)*
(d) Storage of finished products *(2017)*
(E) Inspection and test
(a) Inspection and test procedures/standards

(b) Qualification of the personnel involved in activities related to the inspection and test
(c) List and documents of equipment for mechanical tests, chemical analyses and metallography, non destructive examinations and relevant calibration procedures
(d) Details of system used for identification of materials at the different manufacturing stages

(F) Service records
Estimated total annual production of finished products for shipbuilding and for other applications

(G) Other data deemed necessary by the Society

3. Notwithstanding the requirements in the preceding **1,** where the applicant is already approved by the Society and the attachments are entirely equal in content to the documents previously submitted to the Society, the documents may be partly or entirely exempted from submission except for approval test program for approval of the manufacturing process.

4. Where any part of the manufacturing process is assigned to other companies or other manufacturing plants, additional documents related to the manufacturing process showing the names and addresses of the other companies and plants together with the organization and method of inspection for purchasing semi-final products are to be included.

103. Data review

The Society examines the approval test program for approval of manufacturing process submitted in accordance with the requirements. in **102. 2** and where deemed appropriate, the test program is approved and returned to the manufacturer.

104. Plant audit

1. Purpose

The Society will, where deemed appropriate upon review of documents and data submitted, carry out the plant audit in the presence of the Surveyor to verify that the manufacturer has a technical capability to continuously produce the proposed products of equal level in quality under the stable workmanship to the satisfaction of the Society.

2. Items to be audited

The plant audit is to apply to the following items in the presence of the Surveyor

(1) Quality system in general
(A) Establishment and implementation of quality system
(B) Observance and establishment of procedure for handling of customer complaints
(C) Education and training of employees

(2) Control of process and quality
(A) Observance of work instruction
(B) Observance and confirmation of Q.C flow charts
(C) Control of nonconforming product and corrective action

(3) Control of manufacturing and inspection equipment
(A) Observance and establishment of maintenance procedure for manufacturing equipment
(B) Calibration and control of inspection equipment

(4) Others
(A) Updating of documents such as applicable standards, etc.
(B) Comprehension of related requirements for class surveys

(5) Audit methods and acceptance criteria are to be as deemed appropriate by the Society.

3. Time for audit

The time of the audit is to correspond, in principle, to either the time when the proposed product is manufactured or the time when the approval test is carried out. In this case, the manufacturer is to provide the necessary information related to this audit.

4. Exemption of audit

When the manufacturer submits the application of newly produced product with the same manufacturing facilities and similar method of manufacture for products which have been approved by

the Society, the audit items may be exempted wholly or partly according to the review result of the documents.

105. Approval test

1. The approval test is to be carried out in the presence of the Surveyor in accordance with the test method described in each Section of the Guidance or equivalent method thereof. However, the test may be partly or entirely omitted subject to the approval by the Society in case any of the following (1) or (2) is relevant.

(1) In case where the manufacturer has been approved by other Classification Society or an inspection organization recognized by the Society.

(2) In case of approval test for the lower grade products manufactured by the similar methods which have been approved by the Society.

2. In principle, the approval test is to be carried out at the manufacturing sites. If the testing facilities are not available at the works, the tests are to be carried out at accredited laboratories. *(2017)*

3. The test samples used for the approval test are to be selected, as a rule, from the same conditions of products in the presence of the Surveyor during the plant audit as far as practicable.

4. Test records

(1) After completion of the approval test, the manufacturer is to prepare a record of the approval test and operation records relevant to steel making, casting, rolling and heat treatment etc. of the test products and is to submit three copies to the Society upon receiving confirmation by the Surveyor.

(2) All results, which are in any case to comply with the requirements of the Rules, are evaluated for the approval; depending on the results, particular limitations or testing conditions, as deemed appropriate, may be specified in the approval document.

106. Notification and announcement of approval

1. The Society shall issue an Approval Certificate for Manufacturing Process such as **FORM AC-1** shown in **Annex 1** to the applicant, where deemed appropriate by the Society on the basis of the submitted test reports and plant audit results after completion of the approval test.

2. The Society announces the manufacturers who have been granted the approval of manufacturing process in the "List of Approved Manufacturer & Type Approved Equipment" containing the types of products and the main conditions of approval.

107. Changes in the manufacturing process

1. When the alteration to the specifications (materials, composition, dimension, construction, particulars, etc.), manufacturing facilities, manufacturing methods and/or quality control system has a significant effect on the property or quality of the products, or when the works was removed, the manufacturer is to submit the application of alteration to the Society together with the detailed documents of the alteration (where practicable, to be mentioned with a comparison table form between new and old).

2. The Society may request an plant audit or approval test, where deemed necessary upon reviewing the contents of alteration.

3. For the insignificant alterations, the manufacturer shall give the contents of alteration to the Surveyor for confirmation at the appropriate time. In this case the Surveyor shall report the contents of alteration to the head office.

108. Validity and renewal of approval certificate

1. The approval certificate for manufacturing process will be valid within five years from the date of issue. In case where the approval certificate is renewed in accordance with the requirements specified in the preceding **107.**, the expiration date will not be changed.

2. The manufacturer who intends to have a continuation of the approval is to submit an application to the Society three months before the due date together with following data.

(1) Data related to the corrective action for approved product, if any
(2) Alteration to the approved manufacturing process or specification
(3) Service records of approved products or similar products which are approved by this Society (minimum 6 months and over)

3. The Society is to carry out an plant audit in accordance with the requirements specified in **104.** and may request an approval test where deemed necessary after the examination of application and documents thereof.

4. Manufacturers who have not produced the approved grades and products during the period between renewals may be required to either carry out approval tests or, on the basis of results of production of similar grades of products, at the discretion of the Society, be preapproved.

5. Where for operational reasons, the renewal plant audit falls outside the period of approval, the manufacturer will still be considered as approved if agreement to this audit date is made within the period of three months after expiry of the validity. In this instance, if successful, the extension of approval will be back dated to the original renewal date.

109. Suspension or withdrawal of approval

1. Concerning the product quality, during the period of validity, the Society can withdraw the approval of manufacturing process in case any of following cases:

(1) When the materials no longer conform to the given requirements due to amendments or establishment of conventions, laws, rules and regulations.
(2) In service failures traceable to product quality and/or non conformity of the product revealed during test, fabrication and construction.
(3) When the products are produced in breach of the approval conditions or when the test results have been improperly reported.
(4) Changes brought by the Manufacturer without preliminary agreement of the Society to the extent of the approval defined at the time of the approval
(5) When the materials and equipment failed to pass the confirmation test and/or occasional plant audit specified in **110.**
(6) In case where a serious failure of the manufacturer's quality system has been identified or where the manufacturer has failed to inform any changes which will affect the approved quality system to this Society.
(7) In case where the manufacturer has not undergone a renewal plant audit or where the manufacturer is refusing to undergo occasional plant audit requested by this Society.

2. In renewal or occasional audit for approved products, where non-conformities in the approved quality system are found, or where conditions for the issuance of the certificate or for its maintenance have deteriorated, the manufacturer is to correct the non-conformities. Such corrections are to be verified by the Society. In case where corrective actions are not taken within the specified period, the Society may suspend the approved certificate for a given period. In case where the corrective actions are not taken for the suspended period, the Society may withdraw the approval.

3. Having no concern with the product quality the Society can withdraw, during the period of validity, the approval of manufacturing process in the following cases:

(1) When a request for withdrawal is made by the manufacturer.
(2) When the approval fees are not paid.
(3) When considered inappropriate for approved condition by the Society.

4. A manufacturer whose approval has been withdrawn, may apply for re-approval provided that the reasons which resulted in cancellation are corrected, and the Society is to issue the approval certificate after it is confirmed that the corrective action has effectively been implemented.

5. Where an application for re-approval is made for product which had its approval of manufacturing process withdrawn, such application shall be handled according to initial approval of manufacturing process requirements. But, it may be considered as exceptional case in case where the Society specially accepted.

110. Confirmation test and/or occasional plant audit

1. The confirmation test and/or occasional plant audit may be required when serious defect is found in structure or performance, etc. of the materials and equipment retaining approval.
2. After completion of the confirmation test and/or occasional plant audit, the manufacturer is to prepare a record of the confirmation test and/or occasional plant audit and submit three copies to the Society upon receiving confirmation by the Surveyor.

Section 2-1 Rolled Steels

201. Application

The requirements in this Section apply to tests and inspection for the approval of manufacturing process of rolled steels (including rolled steel bars, to which **Pt 2, Ch 1, Sec 6** of the Rules apply) as specified in **Pt 2, Ch 1, Sec 3** of the Rules.

202. Data to be submitted

The following reference data in addition to those specified in **102.** are to be submitted to the Society.

(1) Kind of products (e.g. steel plate, shaped steel, etc.)
(2) Material grade (e.g. *A*, *D*, etc.) and range of thickness
(3) Aim material properties
  (A) range of chemical composition and aim analyses, including grain refining, micro alloying and residual elements, for the various grades of steel; if the range of chemical composition depends on thickness and supply condition, the different ranges are to be specified, as appropriate.
  (B) Aim maximum carbon equivalent(C_{eq}.) according to **Pt 2** of the Rules. For higher strength grades with low carbon content $C < 0{,}13$ %, aim maximum P_{cm} content
  (C) Production statistics of the chemical composition and mechanical properties (TS, YP, EL and KV). The statistics are intended to demonstrate the capability to manufacture the steel products in accordance with the requirements.
(4) Steelmaking
  (A) Steel making process and capacity of furnaces or converters
  (B) Raw material used
  (C) Deoxidation and alloying practice
  (D) Desulphurisation and vacuum degassing installation, if any
  (E) Casting methods(ingot or continuous casting) : In the case of continuous casting, information relevant to type of casting machine, methods to prevent inclusions and segregation control etc., is to be provided as appropriate.
  (F) Ingot or slab size and weight
  (G) Ingot or slab treatment(scarfing and discarding procedures), etc
(5) Reheating and rolling
  (A) Type of furnace and treatment parameters
  (B) Rolling reduction ratio of slab/bloom/billet to finished product thickness
  (C) Rolling and finishing temperatures
  (D) Descaling treatment during rolling
  (E) Capacity of the rolling stands
(6) Heat treatment
  (A) Type of furnaces, heat treatment parameters and their relevant records
  (B) Accuracy and calibration of temperature control devices
(7) For products delivered in the controlled rolling(*CR*) or thermo-mechanical rolling(*TM*) condition, the following additional information on the programmed rolling schedules is to be given:
  (A) Description of the rolling process
  (B) Normalizing temperature, re-crystallization temperature and A_{r3} temperature and the methods used to determine them
  (C) Control standards for typical rolling parameters used for the different thickness and grades of steel (temperature and thickness at the beginning and at the end of the passes, interval between passes, reduction ratio, temperature range and cooling speed of accelerated cooling, if any) and relevant method of control
  (D) Calibration of the control equipment
(8) Recommendations for working and welding in particular for products delivered in the *CR* or *TM* condition
  (A) Cold and hot working recommendations if needed in addition to the normal practice used in the shipyards and workshops
  (B) Minimum and maximum heat input if different from the ones usually used in the shipyards and workshops (15 - 50 kJ/cm)

203. Approval tests

1. Test samples and specimen

(1) For each grade of steel and for each manufacturing process (e.g. steel making, casting, rolling and condition of supply), test samples are in general to be selected for each kind of product.

(2) Test samples are to be taken in the presence of the Surveyor from the product (plate, flat, section, bar) corresponding to the top of the ingot, or, in the case of continuous casting, a random slabs from the ladle of the first heat and the last heat in one casting sequence.

(3) The position of the samples to be taken in the length of the rolled product, "piece" defined in **Pt 2, Ch 1, 301.** of the Rules (top and/or bottom of the piece) and the direction of the test specimens with respect to the final direction of rolling of the material are indicated in **Table 2.2.2.** The position of the samples in the width of the product is to be in compliance with **Pt 2, Ch 1, 301.** of the Rules

(4) Test samples are to be taken from the product with the maximum thickness (dimension) to be approved. In addition, for initial approval, the Society will require selection of one test product of average thickness.

2. Approval test and acceptance criteria

(1) Approval tests are to be carried out in the presence of the Surveyor at the manufacturing plant and approval test items are to be as given in **Table 2.2.1**

(2) Test methods and acceptance criteria are to be as given in **Table 2.2.2.** However, where accordance with these requirements are difficult, decisions are left to the discretion of the Society.

3. Weldability test

(1) Preparation of the test assemblies
Welded joints tests are to be carried out on samples of the thickest plate.
(A) 1 butt weld test assembly welded with a heat input approximately 15 kJ/cm
(B) 1 butt weld test assembly welded with a heat input approximately 50 kJ/cm

(2) Welding of the test assemblies
(A) The butt weld test assemblies are to be prepared with the weld seam transverse to the plate rolling direction, so that impact specimens will result in the longitudinal direction.
(B) The bevel preparation should be preferably $1/2\,V$ or K.
(C) The welding procedure should be as far as possible in accordance with the normal welding practice used at the yards for the type of steel in question. The welding parameters including consumables designation and diameter, pre-heating temperatures, inter-pass temperatures, heat input, number of passes, etc. are to be reported.

(3) Type of tests and acceptance criteria
Kinds of tests, test methods and acceptance criteria are to be as given in **Table 2.2.3.**

(4) Other tests
Additional tests such as cold cracking tests (CTS, Cruciform, Implant, Tekken, Bead-on plate), CTOD, or other tests may be required in the case of when deemed necessary by the Society.

4. In addition to those specified in **105. 1** a reduction of the indicated number of casts, steel plate thicknesses and grades to be tested or complete suppression of the approval tests may be considered subject to the approval by the Society on the basis of the preliminary information submitted by the manufacturer in case any of the following (1) or (5) is relevant. On the other hand, an increase of the number of casts and thicknesses to be tested may be required in the case of newly developed types of steel or manufacturing processes.

(1) Approval for any grade of steel also covers approval for any lower grade(impact test temperature) in the same strength level, provided that the method of manufacture and condition of supply are similar.

(2) For higher tensile steels, approval of one strength level covers the approval of the strength level immediately below, provided the steelmaking process, deoxidation and fine grain practice, casting method and condition of supply are similar.

(3) Change of the approval conditions.

(4) Grades of steel to be approved and availability of long term statistic results of chemical and mechanical properties

Table 2.2.1 Approval Test Items for Rolled Steels *(2017)*

Kinds	grade	Base metal test												Brittle fracture test			Weldability test					Other test			
		(a)	(b)	(c)	(d)	(e)	(f)	(g)	(h)	(i)	(j)	(k)	(l)	(m)	(n)	(o)	(p)	(q)	(r)	(s)	(t)	(u)	(v)	(w)	(x)
Rolled steel for hull	*A*, *B*	○	○	○		○		○			○														
	D	○	○	○		○		○			○	○													
	E	○	○	○		○		○			○	○			○		○	○	○	○					
	*AH*32, *AH*36, *AH*40, *DH*32, *DH*36, *DH*40	○	○	○		○		○			○	○					○	○	○	○					
	*EH*32, *EH*36, *EH*40, *FH*32, *FH*36, *FH*40	○	○	○		○		○			○	○			○	○ (7)	○	○	○	○					
YP47 steel plates (**Sec. 2-4**)	*EH*47-*H*	○	○	○		○		○			○	○		○ (8)	○	○	○	○	○	○	○				
High strength steels for welded structures (**Sec. 2-6**)	*AH*43~*FH*97, *FH*43~*FH*70	○	○	○		○		○	○		○	○		○	○		○	○	○	○	○				
Rolled steels for low temp. service	*RL*235A~*RL*9*N*490	○	○	○		○		○	○		○	○		○	○		○	○	○	○					
Rolled steel for boilers	*RSP*42~*RSP*49*A*	○	○	○		○		○	○		○								○			○	○		
Rolled steels for pressure vessels	*RPV*24~*RPV*50	○	○	○		○		○	○		○	○			○				○						
Round bars for chain	*RSBC*31~*RSBC*70	○	○	○		○		○	○		○								○						
Round bars for offshore chains and accessories(6)	*RSBCR*3, *RSBCR*3*S*, *RSBCR*4, *RSBCR*4*S* *RSBCR*5	–																							
Rolled steels bar for boilers	*RSB*42~*RSB*46	○	○	○		○		○	○		○														
Rolled and forged steel carbon bars	*RSFB*400 ~*RSFB*760	○	○	○		○		○	○		○														
Rolled and forged steel low alloy steel bars	*RSFB*600*A* ~*RSFB*1100*A*	○	○	○		○		○	○		○														
Rolled stainless steels	*RSTS*304~*RSTS*347	○	○	○		○	○	○	○		○													○	
Stainless clad steel plates	Base metal: *A*~*E*; Clad metal: *RSTS*304~*RSTS*347	○	○	○	○	○	○	○	○	○	○													○	○

Notes

(1) Where thermo-mechanical controlled processing(TMCP) is performed, tensile test after stress relieving is required in addition to those tests given in table.

(2) For steel materials with consideration against through thickness properties as specified in **Pt 2, Ch 1.** of the Rules, the tensile test of through thickness direction, microscopic examination for non-metallic inclusions, ultrasonic test are required in addition to those tests given in table.

(3) For steels other than steel plates, the strain ageing Charpy impact test, NRL drop weight test and CTOD test are not required, unless otherwise specified. However, where cast piece from the continuous casting method is used, the macro-structure of the cast piece and sulphur print test may be required.

(4) The CTOD test, high temperature tension test and creep test as specified in the Table are performed for the purpose of evaluating low temperature toughness and high temperature characteristics, and these tests may be omitted in case appropriate records prepared by the manufacturer are available or in case the Society deems the test unnecessary.

Table 2.2.1 Approval Test Items for Rolled Steels (continued)

Notes

(5) Additional tests such as large scale brittle fracture tests (Double Tension test, ESSO test, Deep Notch test, etc.) or other tests may be required when deemed necessary by the Society.

(6) The approval test items of round bar for offshore chains and accessories are to be in accordance with **Sec. 10-3**.

(7) Brittle crack arrest steel is to be carried out standard ESSO test in accordance with **Pt 2**, **Ch 1**, **Sec. 2** of the Guidance.

(8) Instead of CTOD test, deep notch test may be carried out.

(9) Kind of test

(a) Chemical analysis (b) Sulphur print (c) Micro structure (d) Macro structure (e) Ferrite grain size
(f) Hardness test (g) Tensile test (h) Bend test (i) Shearing strength test (j) Charpy impact test
(k) Strain charpy impact test (l) Hydrogen embrittlement test (m) CTOD test
(n) NRL drop weight test (o) Esso test (p) Weldment tensile test (q) Weldment impact test
(r) Max. hardness test (s) Macro structure (t) Hydrogen crack test (u) High temp. tensile test
(v) Creep test (w) Corrosion test (x) Ultrasonic test

Table 2.2.2 Test Items and Selection of Test Specimens

Approval test items		Position of the Sample (0)	Direction of the test specimens	Approval Testing method	acceptance criteria
Base metal test	Chemical analysis	T(Top)	-	**KS D 0228** or equivalent method. Ladle analysis and production analysis(from the tensile test specimens) are to be performed for C, Si, Mn, P, S and other elements as deemed necessary.	The chemical composition by ladle analysis is to comply with the requirements in **Pt2, Ch1, Sec3** of the Rules. Excess difference in the chemical compositions between melt analysis and product analysis is not to be accepted.
	Sulphur print	T	T (Transverse)	**KS D 0226** or equivalent method. Length is to be greater than 600 *mm* (cross section in the case of cast piece)	Segregation, etc, deemed to have negative effect are not to be present
	Microscopic exam. for non-metallic inclusion	T	T	**KS D 0204** or equivalent method.	Acceptance criteria is the reference.
	Macro structure	T	T	**KS D 0204** or equivalent method.	
	Micro structure	T	-	Microscopic photographs (approx. 100x) of base metal, joining part and cladding metal are to be taken	
	Ferrite grain size	T		**KS D 0205** or equivalent method. Magnification of microscopic photographs are to be as a rule 100x. (2)	
	Hardness test	T	-	In accordance with **Pt 2** of the Rules. Hardness distribution in the thickness direction is to be measured in the case of stainless clad steel.	To meet the requirements in **Pt 2, Ch 1, Sec 3** of the Rules, to be as appropriate by the Society.
	Tensile test	T	T(3)	In accordance with **Pt 2** of the Rules. (4)(5)	To meet the requirements in **Pt 2, Ch 1, Sec 3** of the Rules.
		B (Bottom)	T(3)		
	Tensile test of through thickness direction	T	thickness direction	In accordance with **Pt 2** of the Rules	To meet the requirements in **Pt 2, Ch 1, Sec 3** of the Rules
		B			
	Tensile test (stress relieved) (6)	T	T(3)	Tensile test after stress relieving at 600℃(2 *min/mm* with minimum 1 hour holding)	Acceptance criteria is the reference.
		B	T(3)		
	Bend test	B	T	In accordance with **Pt 2** of the Rules. However, in case of not being prescribed in the **Pt 2**, bend test is to be in accordance with recognized national or international standard which the Society considers appropriate.	Defects etc, deemed to have negative effect are not to be present
	Shearing strength test	T	-	In accordance with **Pt 2** of the Rules	To meet the requirements in **Pt 2, Ch 1, Sec 3** of the Rules
		B			
	V-notch Charpy impact test	T	P (Parallel)	Using R4 test specimen, the transition temperature curve of the absorbed energy and fracture surface ratio is to be determined by testing three pieces at each temperature. (8)(9) (also the lateral expansion to be reported.) Furthermore, the test temperature is to include the temperature as specified in **Pt 2** of the Rules, and its interval is to be 10~20°C (10) V-notch Charpy impact test specimens for stainless clad steels are to be taken from the base material.	To meet the requirements in **Pt 2** of the Rules. Others are the reference.
			T(7)		
		B	P		
	Strain ageing V-notch charpy impact test	T	P	Same as V-notch Charpy impact test. However The test specimens which have been maintained for one hour at 250°C after strain of 5 % have been applied is, as a rule, to be used. (8)(9)(11)	Acceptance criteria is the reference.
	Hydrogen embrittlement test	T	P	In accordance with **Pt 2, Ch 1, Sec 3** of the Rules	To meet the requirements in **Pt 2, Ch 1, Sec 3** of the Rules
		B	P		

Table 2.2.2 Test Items and Selection of Test Specimens (continued)

Approval test items		Position of the Sample	Direction of the test specimens	Approval Testing method	acceptance criteria
Brittle fracture test	CTOD test	T	P	**BS 7448** or equivalent. To be consulted with the Society the dimension of test specimen, test condition, etc, when newly performing tests at the time of approval.	Acceptance criteria is the reference.
	NRL drop weight test	T	P(7)	**ASTM E 208** or equivalent method. The NDTT(Non- Ductility transition temperature) is to be determined and photographs of the tested specimens are to be taken and enclosed with the test report.	Acceptance criteria is the reference. However no fracture to be occurred at the impact test temperature specified in **Pt 2** of the Rules.
Weldability test	Weldment tensile test	T	T(to the welding direction)	in accordance with the test method described in below **203. 3**	in accordance with the test method described in below **203. 3**
	Weldment impact test	T			
	Maximum hardness test	T	-		
	Macro structure	T	-		
High temp. characteristics tests	High temp. tensile test	T	P	**KS D0026**(High temp. tensile test), **KS B 0814**(Creep test) or equivalent.. To be consulted with the Society on the dimension of test specimen, test condition etc, when newly performing tests at the time of Approval.	Acceptance criteria is the reference.
	Creep test	T	P		
Corrosion resistance test	Corrosion test	T	-	**KS D 0220, KS D 0221** and **KS D 0222** or equivalent method.	Acceptance criteria is the reference.
Non-destructive test	Ultrasonic test	All surface	-	**KS D 0234**(Clad Steels), **KS D 0233**(Steels with through thickness property), **KS D 0248**(Bars for chains) or equivalent method.	Clad Steels to be met the requirements of class 1 of **KS D 0234.** Others to be free from any defects deemed to have negative effect.

Notes

(0) The followings can be shown the example of the position (Top and Bottom) where the test samples are detached

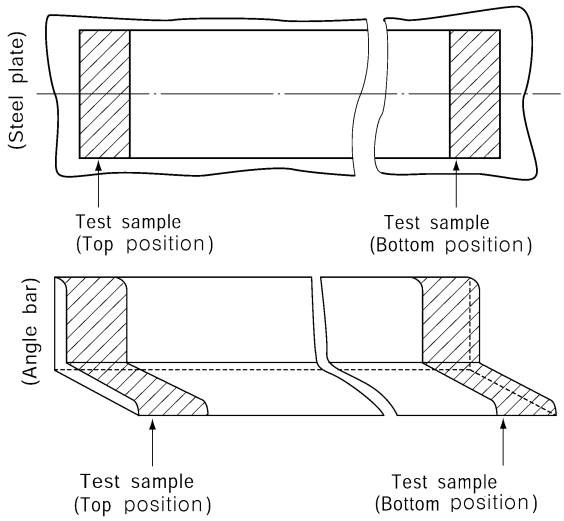

(1) For rolled steels for hull, the content of the following elements is to be checked: *C, Mn, Si, P, S, Ni, Cr, Mo, Al, N, Nb, V, Cu, As, Sn, Ti* and, for steel manufactured from electric or open-hearth furnace, *Sb* and *B*.

(2) For thick products in general at least three examinations are to be made at surface, one quarter and mid-thickness of the product.

(3) Longitudinal direction for sections and plates having width less than 600 mm.

(4) In case of tensile test specimens of bar steels taken from steels over 40 mm in thickness, test specimens are to be taken at the middle of thickness and in accordance with the requirements of **Part 2** of the Rules.

Table 2.2.2 Test Items and Selection of Test Specimens (continued)

(5) For plates made from hot rolled strip one additional tensile specimen is to be taken from the middle of the strip constituting the coil.
(6) Only for TMCP steels, or when deemed necessary by the Society.
(7) Not required for sections and plates having width less than 600 mm.
(8) For plates made from hot rolled strip one additional set of impact specimens is to be taken from the middle of the strip constituting the coil.
(9) For plates having thickness higher than 40 mm one additional set of impact specimens is to be taken with the axis located at mid-thickness.
(10) Impact test temperature of hull steels are as bellows ;

Grades	Direction	Test temp.(℃)			
A, *B*, *AH* 32, *AH* 36, *AH* 40	longitudinal	+20	0	-20	-
D, *DH* 32, *DH* 36, *DH* 40		0	-20	-40	-
E, *EH* 32, *EH* 36, *EH* 40		0	-20	-40	-60
FH 32, *FH* 36, *FH* 40		-20	-40	-60	-80
A, *B*, *AH* 32, *AH* 36, *AH* 40	Transverse	+20	0	-20	-
D, *DH* 32, *DH* 36, *DH* 40		0	-20	-40	-
E, *EH* 32, *EH* 36, *EH* 40		-20	-40	-60	-
FH 32, *FH* 36, *FH* 40		-40	-60	-80	-

(11) Strain ageing charpy impact test temperature of hull steels are as bellows;

Grades	Test temperature(℃)		
AH 32, *AH* 36, *AH* 40	+20	0	-20
D, *DH* 32, *DH* 36, *DH* 40	0	-20	-40
E, *EH* 32, *EH* 36, *EH* 40	-20	-40	-60
FH 32, *FH* 36, *FH* 40	-40	-60	-80

Table 2.2.3 Weldability test Items, test methods and acceptance criteria

Test items	Direction of the test specimens	Test method	Acceptance criteria
Tensile test	T (Transverse)	In accordance with **Pt 2** of the Rules	To meet the requirements in **Pt 2, Ch 2, Sec 4** of the Rules
Charpy V-notch Impact test	T	(a) A set of 3 Charpy V-notch impact specimens transverse to the weld with the notch located at the fusion line and at a distance 2, 5 and minimum 20 mm from the fusion line. (b) The fusion boundary is to be identified by etching the specimens with a suitable reagent.	To meet the requirements in **Pt 2, Ch 1, Sec 3, Table 2.1.7** of the Rules.
Maximum hardness tests	-	Hardness tests Hv 5 across the weldment. The indentations are to be made along a 1 mm transverse line beneath the plate surface on both the face side and the root side of the weld as follows: - Fusion line - HAZ : at each 0,7 mm from fusion line into unaffected base material (6 to 7 minimum measurements for each HAZ)	The maximum hardness value should not be higher than 350 *Hv*.
Macro structure tests	T	A sketch of the weld joint depicting groove dimensions, number of passes, hardness indentations should be attached to the test report together with photo-macrographs of the weld cross section.	To be free from crack, incomplete penetration, lack of fusion, other harmful defects

5. In case of multi-source slabs or changing of slab manufacturer, the rolled steel manufacturer is required to obtain the approval of the manufacturing process of rolled steels using the slabs from each slab manufacturer and to conduct approval tests in accordance with 2 and 3 above. A reduction or complete suppression of the approval tests may considered by the Society taking into account previous approval as follows:

(1) the rolled steel manufacturer has already been approved for the manufacturing process using other semi finished products characterized by the same thickness, steel grade, grain refining and micro-alloying elements, steel making and casting process;

(2) the semi finished products manufacturer has been approved for the complete manufacturing process with the same conditions (steelmaking, casting, rolling and heat treatment) for the same steel types.

204. Changes in the manufacturing process

In addition to those specified in **107.**, the manufacturer has to submit to the Society the documents together with the request of changing the approval conditions, in the case of the followings:

(1) Change of the manufacturing process (steel making, casting, rolling and heat treatment)

(2) Change of the maximum thickness (dimension)

(3) Change of the chemical composition, added element, etc.

(4) Subcontracting the rolling and heat treatment, etc.

(5) Use of the slabs, blooms and billets manufactured by companies other than the ones verified in the approval tests.

205. Dealing after approval

Rolled steels which conform to the requirements in this Section are to be dealt with as [an approved case] in the requirements in **Pt 2, Ch 1, 201. 3** (2) of the Rules, unless otherwise specified by the Society. The manufacturer can detached the test samples from material without being stamped by the Surveyor.

Section 2-2 Semi Finished Products for Rolled Steels

211. Application

1. The requirements in this Section apply to tests and inspection for the approval of manufacturing process of semi-finished products such as slabs, blooms and billets for the rolled steels (including rolled steel bars, to which **Pt 2, Ch 1, Sec 6** of the Rules apply) as specified in **Pt 2, Ch 1, Sec 3** of the Rules.

2. Requirements other than those specified in this Section are to be in accordance with the requirements of **Section 2-1.**

212. Data to be submitted

The following reference data in addition to those specified in **102.** are to be submitted to the Society.

(1) Type of products (ingots, slabs, blooms, billets)
(2) Material grade (e.g. A, D, etc.) and range of thickness
(3) aim material properties
  (A) range of chemical composition and aim analyses, including grain refining, micro alloying and residual elements, for the various grades of steel; if the range of chemical composition depends on thickness and supply condition, the different ranges are to be specified, as appropriate.
  (B) Aim maximum carbon equivalent($Ceq.$) according to **Pt 2** of the Rules. For higher strength grades with low carbon content C < 0,13 %, aim maximum Pcm content
  (C) Production statistics of the chemical composition and mechanical properties (TS, YP, EL and KV). The statistics are intended to demonstrate the capability to manufacture the steel products in accordance with the requirements.
(4) Steelmaking
  (A) Steel making process and capacity of furnaces or converters
  (B) Raw material used
  (C) Deoxidation and alloying practice
  (D) Desulphurisation and vacuum degassing installation, if any
  (E) Casting methods(ingot or continuous casting) : In the case of continuous casting, information relevant to type of casting machine, methods to prevent inclusions and segregation control etc., is to be provided as appropriate.
  (F) Ingot or slab size and weight
  (G) Ingot or slab treatment(scarfing and discarding procedures), etc

213. Approval tests

1. Test samples and specimen

(1) For each type of steel and for each manufacturing process (e.g. ingot casting, continuous casting), one test product with the maximum thickness and one test product with the minimum thickness to be approved are in general to be selected for each kind of product (ingots, slabs, blooms/billets). The selection of the casts for the test product is to be based on the typical chemical composition, with particular regard to the specified Ceq or Pcm values and grain refining micro-alloying additions.
(2) The test samples are to be taken, unless otherwise agreed, from the product (slabs, blooms, billets) corresponding to the top of the ingot, or, in the case of continuous casting, a random sample.

2. Approval test and acceptance criteria

(1) Approval tests are to be carried out in the presence of the Surveyor at the manufacturing plant and approval test items are to be as given in **Table 2.2.4.**
(2) Test methods and acceptance criteria are to be as given in **Table 2.2.4**. However, where accordance with these requirements are difficult, decisions are left to the discretion of the Society.
(3) In addition, for initial approval and for any upgrade of the approval, the Society will require full tests indicated in **Sec 2-1. 203.** to be performed at rolling mill on the minimum thickness semi finished product.

(4) In case of a multi-caster work, full tests on finished products shall be carried out for one caster and reduced tests (chemical analysis and sulphur print) for the others.

Table 2.2.4 Approval test items and acceptance criteria of Semi Finished Products for Rolled Steels

Approval test items	Approval Testing method	acceptance criteria
Chemical analyses	Both the ladle and product analyses are to be reported. In general the content of the following elements is to be checked: C, Mn, Si, P, S, Ni, Cr, Mo, Al, N, Nb, V, Cu, As, Sn, Ti and, for steel manufactured from electric or open-hearth furnace, Sb and B.	The chemical composition by ladle analysis is to comply with the requirements in **Pt 2, Ch 1, Sec 3** of the Rules. Excess difference in the chemical compositions between melt analysis and product analysis is not to be accepted.
Sulphur prints	Sulphur prints are to be taken from product edges which are perpendicular to the axis of the ingot or slab. These sulphur prints are to be approximately 600 mm long taken from the centre of the edge selected, i.e. on the ingot centreline, and are to include the full product thickness.	Segregation, etc, deemed to have negative effect are not to be present

3. In addition to those specified in **105. 1.** a reduction of the indicated number of casts, product thicknesses and types to be tested or complete suppression of the approval tests may be considered subject to the approval by the Society on the basis of the preliminary information submitted by the manufacturer in case any of the following (1) or (2) is relevant. On the other hand, an increase of the number of casts and thicknesses to be tested may be required in the case of newly developed types of steel or manufacturing processes.

(1) Approval already granted by other Classification Societies and documentation of approval tests performed.

(2) Types of steel to be approved and availability of long term statistic results of chemical properties and of mechanical tests performed on rolled products.

214. Certification

1. On the approval certificate the following information is to be stated:

(1) Types of steel (normal or higher strength)

(2) Type of products (ingots, slabs, blooms, billets)

(3) Steelmaking and casting processes

(4) Thickness range of the semi-finished products

2. It is also to be indicated that the individual users of the semi finished products are to be approved for the manufacturing process of the specific grade of rolled steel products they are going to manufacture with those semi finished products.

215. Changes in the manufacturing process

In addition to those specified in **107.**, the manufacturer has to submit to the Society the documents together with the request of changing the approval conditions, in the case of the followings:

(1) Change of the manufacturing process (steel making, and casting)

(2) Change of the maximum thickness (dimension)

(3) Change of the chemical composition, added element, etc.

Section 2-3 Rolled Steels intended for welding with high heat input

221. Application

The requirements in this Section specifies the weldability confirmation scheme of normal and higher strength hull structural steels intended for welding with high heat input over 50kJ/cm. The weldability confirmation scheme is to be generally applied by manufacturer's option.

222. Data to be submitted

The following reference data in addition to those specified in **102.** are to be submitted to the Society.

(1) Outline of steel plate to be certified
  (a) grade and thickness range
  (b) deoxidation practice and fine grain practice
  (c) aim range of chemical composition
  (d) aim maximum Ceq and Pcm
  (e) production statistics of mechanical properties (tensile and Charpy V-notch impact tests), if any

(2) Manufacturing control points to prevent toughness deterioration in heat affected zone when welded with high heat input, relevant to chemical elements, steel making, casting, rolling, heat treatment etc.

(3) Welding control points to improve joint properties on strength and toughness, if any.

223. Approval tests

1. Test plate and Test assembly

(1) Test plate is to be manufactured by a process approved by the Society in accordance with the requirements in **Section 2-1**. For each manufacturing process route, two test plates with different thickness are to be selected. The thicker plate (t) and thinner plate (less than or equal to t/2) are to be proposed by the manufacturer.

(2) One butt weld assembly is to be generally prepared with the weld axis transverse to the plate rolling direction. Dimensions of the test assembly are to be amply sufficient to take all the required test specimens.

2. Welding of test assembly

(1) The welding procedures should be as far as possible in accordance with the normal practices applied at shipyards for the test plate concerned.

(2) Welding process, welding position, welding consumable (manufacturer, brand, grade, diameter and shield gas) and welding parameters including bevel preparation, heat input, preheating temperatures, interpass temperatures, number of passes etc. are to be reported.

3. Approval test and acceptance criteria

Approval test items, test methods and acceptance criteria are to be as given in **Table 2.2.5.**

4. Additional test assemblies and/or test items may be required in the case of newly developed type of steel, welding consumable and welding method, or when deemed necessary by the Society. Where the content of tests differs from those specified in **Table 2.2.5**, the program is to be confirmed by the Society before the tests are carried out.

5. Other test

Additional tests such as wide-width tensile test, HAZ tensile test, cold cracking tests (CTS, Cruciform, Implant, Tekken, and Bead-on plate), CTOD or other tests should be required at the discretion of the Society.

224. Grade designation

(1) Upon issuance of the certificate, the notation indicating the value of heat input applied in the confirmation test may be added to the grade designation of the test plate, e.g. "*EH36-W300*" (in the case of heat input 300 kJ/cm applied).

(2) The value of this notation is to be not less than 50 and every 10 added.

Table 2.2.5 Weldability confirmation test Items, test methods and acceptance criteria

Test items	Direction of the test specimens	Test method	Acceptance criteria
Visual examination	-	Overall welded surface should be subject to visual examination.	Overall welded surface is to be uniform and free from injurious defects such as cracks, undercuts, overlaps etc.
Macro structure tests	T	A sketch of the weld joint depicting groove dimensions, number of passes, hardness indentations should be attached to the test report together with photo-macrographs of the weld cross section.	To be free from crack, incomplete penetration, lack of fusion, other harmful defects
Microscopic test	T	Along mid-thickness line across transverse section of the weld, one micrograph with x100 magnification is to be taken at each position of the weld metal centreline, fusion line and at a distance 2, 5, 10 and minimum 20mm from the fusion line.	The test result is provided for information purpose only.
Hardness test	T	Along two lines across transverse weld section 1mm beneath plate surface on both face and root side of the weld, indentations by Hv5 are to be made at weld metal centreline, fusion line and each 0.7mm position from fusion line to unaffected base metal (minimum 6 to 7 measurements for each heat affected zone).	The maximum hardness value should not be higher than 350Hv.
Transverse tensile test	T	Two transverse (cross weld) tensile specimens are to be taken from the test assembly. Test specimens and testing procedures are to comply with the requirements of PT 2	The tensile strength is to be not less than the minimum required value for the grade of base metal.
Bend test	T	Two transverse (cross weld) test specimens are to be taken from the test assembly and bent on a mandrel with diameter of quadruple specimen thickness. Bending angle is to be at least 120°. Test specimens are to comply with the requirements of PT 2. For plate thickness up to 20mm, one face-bend and one root-bend specimens or two side-bend specimens are to be taken. For plate thickness over 20mm, two side-bend specimens are to be taken.	After testing, the test specimens shall not reveal any crack nor other open defect in any direction greater than 3mm.
Impact test	T	(a) Charpy V-notch impact specimens (three specimens for one set) are to be taken within 2mm below plate surface on face side of the weld with the notch perpendicular to the plate surface. (b) One set of the specimens transverse to the weld is to be taken with the notch located at the fusion line and at a distance 2, 5 and minimum 20 mm from the fusion line. (c) The fusion boundary is to be identified by etching the specimens with a suitable reagent. The test temperature is to be the one prescribed for the testing of the steel grade in question. (d) For steel plate with thickness greater than 50mm or one side welding for plate thickness greater than 20mm, one additional set of the specimens is to be taken from the root side of the weld with the notch located at each the same position as for the face side. (e) Additional tests at the different testing temperatures may be required for evaluating the transition temperature curve of absorbed energy and percentage crystallinity at the discretion of the Classification Society.	The average impact energy at the specified test temperature is to comply with the requirements of PT 2 depending on the steel grade and thickness. Only one individual value may be below the specified average value provided it is not less than 70% of that value.

Section 2-4 YP47 Steel Plates

231. Application

1. The requirements in this Section apply to tests and inspection for the approval of manufacturing process of YP47 Steel Plates for longitudinal structural members in the upper deck region of container carriers as specified in **Pt 2, Ch 1, 311.** of the Rules.
2. Requirements other than those specified in this Section are to be in accordance with the requirements of **Section 2-1.**

232. Data to be submitted

The following reference data in addition to those specified in **102.** are to be submitted to the Society.
(1) Data to be submitted are to be as given in **202.**
(2) In addition to (1) above, aim maximum Pcm content

233. Approval tests

1. General

Approval test items, test methods and acceptance criteria not specified in this Requirements are to be in accordance with **Section 2-1**.

2. Approval range

One test product with the maximum thickness to be approved is to be selected provided the approved target chemical composition range remains unchanged.

3. Base Metal test

(1) **Charpy V-notch Impact Tests**

(A) Test samples are to be taken from the plate corresponding to the top of the ingot, unless otherwise agreed. In the case of continuous castings, test samples are to be taken from a randomly selected plate.

(B) The location of the test sample is to be at the square cut end of the plate, approximately one-quarter width from an edge, as shown **Fig. 2.2.1**.

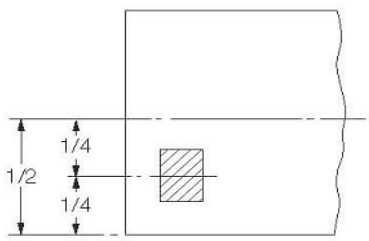

Fig 2.2.1 Plates and flats

(C) Samples are to be taken with respect to the principal rolling direction of the plate at locations representing the top and bottom of the plate as follows:
- Longitudinal Charpy V-notch impact tests : Top and bottom,
- Transverse Charpy V-notch impact tests : Top only,
- Strain aged longitudinal Charpy V-notch impact test : Top only,

(D) Charpy V-notch impact tests are required from both the quarter and mid thickness locations of the test samples. One set of 3 Charpy V-notch impact specimens is required for each impact test.

(E) The Charpy V-notch impact test temperature is to be -40°C.

(F) In addition to the determination of the energy value, the lateral expansion and the percentage crystallinity are also to be reported.

(G) The strain aged samples are to be strained to 5% followed by heating to 250°C for 1 hour prior to testing.

(H) Additionally at each location, Charpy V-notch impact tests are to be carried out with appropriate temperature intervals to properly define the full transition range.

(2) **Brittle fracture initiation test**

(A) Deep notch test or Crack Tip Opening Displacement (CTOD) test is to be carried out and the result is to be reported.

(B) CTOD test is to be carried out in accordance with **BS 7448** or equivalent.

(C) When performing the deep notch test, manufacturer is to submit the detailed test procedure to the Society.

(D) Manufacturer is to be consulted with the Society the dimension of test specimen, test condition, etc.

(3) **Naval Research Laboratory (NRL) drop weight test**

(A) The test method is to comply with ASTM E208 or equivalent method.

(B) Nil Ductility Test Temperature (NDTT) is to be reported for reference and photographs of the tested specimens are to be taken and enclosed with the test report. And NDTT may be used in the qualification of production test methods.

(4) **Brittle crack arrest test**

(A) Standard ESSO test described in **Pt 2, Ch 1, 311. 3** of the Guidance or other alternative test (e.g. double tension test etc.) is to be carried out in order to obtain the brittle crack arrest toughness for reference.

(B) In case of other alternative test, manufacturer is to submit the detailed test procedure to the Society and to be consulted with the Society the dimension of test specimen, test condition, etc.

4. Weldability test

(1) **Charpy V-notch Impact Test**

(A) Charpy V-notch impact tests are to be taken at a position of 1/4 thickness from the plate surface on the face side of the weld with the notch perpendicular to the plate surface.

(B) One set of the specimens transverse to the weld is to be taken with the notch located at the fusion line and at a distance 2, 5 and minimum 20 mm from the fusion line.

(C) The fusion boundary is to be identified by etching the specimens with a suitable reagent.

(D) One additional set of the specimens is to be taken from the root side of the weld with the notch located at the same position and at the same depth as for the face side.

(E) The impact test temperature is -40°C.

(F) Additionally at each location, impact tests are to be carried out with appropriate temperature intervals to properly define the full transition range.

(2) **Y-shape weld crack test (Hydrogen crack test)**

(A) The test method is to be in accordance with recognized national standards such as KS B 0870, JIS Z 3158 or GB 4675.1.

(B) Acceptance criteria are to be as deemed appropriate by the Society.

(3) **Brittle fracture initiation test**

(A) Deep notch test or CTOD test is to be carried out.

(B) Test method and results are to be in accordance with **3.** (2) of this requirements.

Section 2-5 Hull Structural Steels with Improved Fatigue Properties

241. Application

1. The requirements in this Section apply to tests and inspection for the approval of manufacturing process of hull structural steels with improved fatigue properties(hereinafter called "fatigue resistant steels") as specified in **Pt 2, Annex 2-10** of the Guidance.

2. Requirements other than those specified in this Section are to be in accordance with the requirements of **Section 2-1.**

242. Data to be submitted

The following reference data in addition to those specified in **102.** are to be submitted to the Society.
(1) Data to be submitted are to be as given in **202.**
(2) Fatigue properties improvement mechanism of the steels for approval
(3) The grades (including the suffix) to be approved
(4) In-house fatigue test results, if available

243. Data review

The test program submitted by the steel manufacturer is to be reviewed by the Society, and if found satisfactory, it will be approved and returned to the steel manufacturer for acceptance prior to tests being carried out. Items that need to be witnessed by the Surveyor will be identified.

244. Approval tests

1. General

Approval test items, test methods and acceptance criteria not specified in this Requirements are to be in accordance with **Section 2-1**.

2. The approval tests are to be witnessed by the Surveyor at the steel manufacturer's plant. If the testing facilities are not available at the works, the tests are to be carried out at the laboratories accepted by the Society.

3. The plant audit may be required by the Surveyor during the visit for the approval as appropriate. All the test specimens are to be selected and stamped by the Surveyor.

4. Approval range

Approval range is to comply with the requirements of **203.** (4) and (5)

5. Test samples and specimen

(1) For each grade of steels and for each manufacturing process (e.g. steel making, casting, rolling and condition of supply), one(1) test piece with the maximum thickness (dimension) to be approved is in general to be selected for each kind of product. The term "piece" is to comply with **Pt 2, Ch 1, 301.** of the Rules.
(2) In addition, for initial approval, the Society may require selection of one(1) test piece of average thickness.
(3) The selection of the casts for the test product is to be based on the typical chemical composition, with particular regard to the specified C_{eq} or P_{cm} values and grain refining micro-alloying additions.
(4) The corresponding grade of non-fatigue resistant hull structural steels complying with **Pt 2, Ch 1, 301.** of the Rules with the same thickness of fatigue resistant steels tested is to be prepared as a reference material for comparison.

6. The approval tests are to comply with **Table 2.2.6**.

Table 2.2.6 Approval test for fatigue resistant steels

Approval test items	Position of the Sample	Direction of the test specimens	Test method
Fatigue test	T(Top), 1/4 of the width	P(Parallel)	Fatigue test specimens are to comply with **Pt 2, Annex 2-10 5.** (2) of the Guidance. The requirements related to fatigue test procedures are to comply with **Table 2.2.7**. The loading frequency without heat generation should be selected. The fatigue tests should be continued until the failure of the test specimens.
Other than fatigue test	To meet the requirements in **Pt 2, Ch 2-1** of this Guidance. Additional tests in order to confirm the improvement mechanism of the fatigue properties may be required when deemed necessary by the Society.		

Table 2.2.7 Fatigue tests

Kind of steels	Kind of joints	Stress ratio R (= $\sigma_{min}/\sigma_{max}$)	Max. stress σ_{max}	Stress ranges to be tested(2) $\Delta\sigma$ (N/mm^2)	Number of test specimens(3)
Fatigue resistant steel	Transverse non-load-carrying fillet welded joint(5)	–	ReH(1)	70 100 130 150 180	Five(5) for each stress range(4)
	Longitudinal fillet welded gusset(6)	0.1	–		
non-fatigue resistant hull structural steels	Transverse non-load-carrying fillet welded joint	–	ReH(1)		Three(3) for each stress range
	Longitudinal fillet welded gusset	0.1	–		

Notes
(1) ReH : specified minimum yield strength of the test steel
(2) In the case where in-house fatigue test results mentioned in **242.** (4) are regarded adequate by the Society, 100 and 130 N/mm^2 for stress ranges may be omitted.
(3) The number of fatigue test specimens may be increased at the discretion of the Society.
(4) In the case where in-house fatigue test results mentioned in **242.** (4) are regarded adequate by the Society, the number of test specimens for each stress range may be reduced to three(3).
(5) Required min. N_f is 3.63×10^6 for 70 N/mm^2 of stress ranges and is 2.50×10^5 for 150 N/mm^2 of stress ranges.
(6) Required min. N_f is 2.32×10^6 for 70 N/mm^2 of stress ranges and is 1.60×10^5 for 150 N/mm^2 of stress ranges.

7. Fatigue test report

After completion of the manufacturing approval test, the steel manufacturer is to prepare fatigue test report to be included in the dossier required in **Pt 2, Ch 2-1** of this Guidance.

8. Acceptance criteria

(1) The Society will give approval for fatigue resistant steels where all the fatigue test results are considered by the Society to have the required fatigue properties (S-N curve in-air environment) mentioned in **Pt 2, Annex 2-10 4.** (2) of the Guidance based on the data submitted in accordance with the provisions of this Guidance.

(2) Additional tests for fatigue resistant steels and/or non-fatigue resistant hull structural steels may be required by the Society in consideration of the fatigue test results of non-fatigue resistant hull structural steels mentioned in **4.** (4).

(3) All the results, which are in any case to comply with the requirements of this document, are evaluated for the approval; depending on the results, particular limitations or testing conditions, as deemed appropriate, may be specified in the approval document.

245. Renewal of approval certificate

The requirements in addition to those specified in **108.** are to be in accordance with the following.

(1) The fatigue test results in relevant testing and inspection during the period between previous manufacturing approval (initial or renewal) and the validity date are to be submitted.

(2) The above test results of (1) are to comply the following at least.

(A) The fractured test specimens and non-fractured test specimens are to be classified.

(B) The mean S-N curve by least square estimation and the standard deviation of log N_f(number of cycles to failure) are to be analysed statistically only for the results of the fractured test specimens.

Section 2-6 High Strength Steels for Welded Structures *(2017)*

251. Application

1. The requirements in this Section apply to tests and inspection for the approval of manufacturing process of High Strength Steels for use in marine and offshore structural applications, tanks of liquefied gas carriers and process pressure vessels as specified in **Pt 2, Ch 1, Sec 3** of the Rules.

2. Requirements other than those specified in this Section are to be in accordance with the requirements of **Section 2-1.**

252. Data to be submitted

The manufacturing specification with following reference data in addition to those specified in **102.** are to be submitted to the Society.

(1) Kind of products (e.g. plates, sections, bars and tubular etc.)
(2) Material grade (e.g. *AH43, DH47*, etc.) and range of thickness
(3) Aim material properties
  (A) Range of chemical composition and aim analyses, including grain refining, micro alloying and residual elements, for the various grades of steel; if the range of chemical composition depends on thickness and supply condition, the different ranges are to be specified, as appropriate.
  (B) Contents of elements which zirconium, calcium and rare earth metals have been used during steelmaking for grain refinement and, or inclusion modification
  (B) Aim maximum carbon equivalent(C_{eq}. or CET) and Pcm according to **Pt 2** of the Rules.
  (C) Production statistics of the chemical composition and mechanical properties (TS, YP, EL and KV). The statistics are intended to demonstrate the capability to manufacture the steel products in accordance with the requirements.
(4) Steelmaking
  (A) Steel making process and capacity of furnaces or converters
  (B) Raw material used
  (C) Deoxidation, grain refining, nitrogen binding and alloying practice
  (D) Desulphurisation, dehydrogenation, sulphide treatment, ladle refining and vacuum degassing installation, if any
  (E) Casting methods(ingot or continuous casting) : In the case of continuous casting, information relevant to type of casting machine, teeming practice, methods to prevent re-oxidation, methods to prevent inclusions and segregation control, presence of electromagnetic stirring, soft reduction, etc., is to be provided as appropriate.
  (F) Casting/solidification cooling rate control
  (G) Ingot or slab size and weight
  (H) Ingot or slab treatment(scarfing and discarding procedures), etc
(5) Reheating and rolling
  (A) Type of furnace and treatment parameters
  (B) Rolling reduction ratio of slab/bloom/billet to finished product thickness
  (C) Rolling and finishing temperatures
  (D) Descaling treatment during rolling
  (E) Capacity of the rolling stands
(6) Heat treatment
  (A) Type of furnaces, heat treatment parameters and their relevant records
  (B) Accuracy and calibration of temperature control devices
  (C) The methods used to determine austenitizing temperature, re-crystallization temperature and A_{r3} temperature
  (D) Description of quenching and tempering process, if applicable
(7) For products delivered in the controlled rolling(*CR*) or thermo-mechanical rolling(*TM*) condition, the following additional information on the programmed rolling schedules is to be given:
  (A) Description of the rolling process
  (B) The methods used to determine austenitizing temperature, re-crystallization temperature and A_{r3} temperature
  (C) Control standards for typical rolling parameters used for the different thickness and grades of steel (temperature and thickness at the beginning and at the end of the passes, interval

between passes, reduction ratio, temperature range and cooling speed of accelerated cooling, if any) and relevant method of control

(D) Calibration of the control equipment

(8) Recommendations for working and welding in particular for products delivered in the *CR* or *TM* condition

(A) Cold and hot working recommendations if needed in addition to the normal practice used in the shipyards and workshops

(B) Minimum and maximum heat input and recommended pre-heat/interpass temperature

253. Approval tests

1. Test samples and specimen

(1) For each grade of steel and for each manufacturing process (e.g. steel making, casting, rolling and condition of supply), one test product with the maximum thickness (dimension) to be approved is in general to be selected for each kind of product. In addition, for initial approval, the Society will require selection of one test product of representative thickness.

(2) The selection of the casts for the test product is to be based on the typical chemical composition, with particular regard to the aimed Ceq, CET or Pcm values and grain refining micro-alloying additions.

(3) The test samples are to be taken, unless otherwise agreed, from the product (plate, flat, section, bar and tubular) corresponding to the top and bottom of the ingot, or, in the case of continuous casting, a random sample.

(4) The position of the samples to be taken in the length of the rolled product, "piece" defined in **Pt 2, Ch 1, 301.** of the Rules, (top and bottom of the piece) and the direction of the test specimens with respect to the final rolling direction of the material are indicated in **Table 2.2.2**. The position of the samples in the width of the product is to be in accordance with **Pt 2, Ch 1, 301.** of the Rules.

2. Approval test and acceptance criteria

(1) Approval tests are to be carried out in the presence of the Surveyor at the manufacturing plant and approval test items are to be as given in **Table 2.2.1**.

(2) Test methods and acceptance criteria are to be as given in **Table 2.2.8**. However, it may be modified on the basis of the preliminary information submitted by the manufacturer. Approval test method is to be confirmed by the Society before the tests are carried out.

3. Weldability test

(1) Preparation of the test assemblies

(A) For the steels specified yield point of 420 N/mm^2 ~ 500 N/mm^2

Weldability tests are to be carried out on samples of the thickest plate. Testing on higher grades can cover the lower strength and toughness grades.

(a) 1 butt weld test assembly welded with a heat input 15±2 kJ/cm is to be tested as-welded

(b) 1 butt weld test assembly welded with a heat input 50±5 kJ/cm for N/NR and TM and 35±3.5 kJ/cm for QT steels is to be tested as-welded

(c) 1 butt weld test assembly welded with the same heat input as given in (b) is to be post-weld heat treated (PWHT) prior to testing

(d) Steels intended to be designated as steels for high heat input welding are to be tested with 1 butt weld test assembly in the as-welded condition and 1 test assembly in the PWHT condition, both welded with the maximum heat input being approved

(B) For the steels specified yield point of 550 N/mm^2 ~ 960 N/mm^2

In general, the thickest plate with the highest toughness grade for each strength grade is to be tested. Provided the chemical composition of the higher grade is representative to the lower grade, testing requirements on the lower grades may be reduced at the discretion of the Society.

(a) 1 butt weld test assembly welded with a heat input 10±2 kJ/cm is to be tested as-welded

(b) 1 butt weld test assembly welded with a maximum heat input as proposed by the manufacturer is to be tested as-welded. The approved maximum heat input is to be stated on the manufacturer approval certificate

(c) If the manufacturer requests to include the approval for Post Weld Heat Treated

(PWHT) condition, 1 additional butt weld test assembly welded with a maximum heat input proposed by the manufacturer for the approval same as test assembly (b) is to be post-weld heat treated (PWHT) prior to testing

(2) Welding of the test assemblies

(A) The butt weld test assemblies of N/CR plates are to be prepared with the weld seam transverse to the final plate rolling direction. The butt weld test assemblies of TM/TM+AcC/TM+DQ and QT plates are to be prepared with the weld seam parallel to the final plate rolling direction. The butt weld test assemblies of long products, sections and seamless tubular in any delivery condition are to be prepared with the weld seam transverse to the rolling direction.

(B) The bevel preparation is to be preferably 1/2V or K related to thickness.

(C) The welding procedure is to be as far as possible in accordance with the normal welding practice used for the type of steel in question. The welding procedure and welding record are to be submitted to the Surveyor for review.

(D) Post-weld heat treatment procedure

(a) Steels delivered in N/CR or TM/TM+AcC/TM+DQ condition are to be heat treated for a minimum time of 1 hour per 25 mm thickness (but not less than 30 minutes and needs not be more than 150 minutes) at a maximum holding temperature of 580 °C, unless otherwise approved at the time of approval.

(b) Steels delivered in QT condition are to be heat treated for a minimum time of 1 hour per 25 mm thickness (but not less than 30 minutes and needs not be more than 150 minutes) at a maximum holding temperature of 550 °C with the maximum holding temperature of at least 30 °C below the previous tempering temperature, unless otherwise approved at the time of approval.

(c) Heating and cooling above 300 °C are to be carried out in a controlled manner in order to heat/cool the material uniformly. The cooling rate from the max. holding temperature to 300 °C shall not be slower than 55 °C/hour.

(3) Approval test and acceptance criteria

Approval test items, test methods and acceptance criteria are to be as given in **Table 2.2.9**.

4. Other test

Additional tests such as CTOD test on parent plate, large scale brittle fracture tests (Double Tension test, ESSO test, Deep Notch test, etc.) or other tests may be required in the case of newly developed type of steel, outside the scope of **Pt 2, Ch 1, 308.** of the Rules, or when deemed necessary by the Society.

5. In addition to those specified in **105. 1** a reduction of the indicated number of casts, steel plate thicknesses and grades to be tested or complete suppression of the approval tests may be accepted by the Society on the basis of the preliminary information submitted by the manufacturer in case any of the following (1) or (2) is relevant. On the other hand, an increase of the number of casts and thicknesses to be tested may be required in the case of newly developed types of steel or manufacturing processes.

(1) Approval already granted by other Classification Societies and documentation of approval tests performed.

(2) Grades of steel to be approved and where available the long term statistical results of chemical and mechanical properties.

6. In case of multi-source slabs or changing of slab manufacturer, the rolled steel manufacturer is required to obtain the approval of the manufacturing process of rolled steels using the slabs from each slab manufacturer and to conduct approval tests in accordance with **2**, **3** and **4**. A reduction or complete suppression of the approval tests may be considered by the Society taking into account previous approval as follows:

(1) the rolled steel manufacturer has already been approved for the manufacturing process using other semi finished products characterized by the same thickness, steel grade, grain refining and micro-alloying elements, steel making and casting process;

(2) the semi finished products manufacturer has been approved for the complete manufacturing process with the same conditions (steelmaking, casting, rolling and heat treatment) for the same steel types.

Table 2.2.8 Test Items and Selection of Test Specimens

Approval test items		Position of the Sample[0]	Direction of the test specimens	Approval Testing method	acceptance criteria
Base metal test	Chemical analysis	T(Top)	-	**KS D 0228** or equivalent method. Ladle analysis and production analysis(from the tensile test specimens) are to be performed for C, Si, Mn, P, S and other elements[1] as deemed necessary. Carbon equivalent(Ceq or CET) and/or Pcm are to be calculated, as applicable.	The chemical composition by ladle analysis is to comply with the requirements in **Pt2, Ch1, 308.** of the Rules. The deviation of the product analysis from the ladle analysis is to be permissible in accordance with the limits given in the manufacturing specification
	Sulphur print[2]	T	T (Transverse)	**KS D 0226** or equivalent method. Length is to be greater than 600 mm (cross section in the case of cast piece)	Segregation, etc, deemed to have negative effect are not to be present.
	Micro structure[3]	T	-	All photomicrographs are to be taken at x 100 and 500 magnification. The standards of the micrographic examination methods **ISO 4967** or equivalent standards are applicable.	The level of non-metallic inclusions and impurities in term of amount, size, shape and distribution are to be controlled by the manufacturer. Alternative methods for demonstrating the non-metallic inclusions and impurities may be used by the manufacturer.
	Ferrite grain size	T		All photomicrographs are to be taken at x 100 and 500 magnification. **KS D 0205** or equivalent method. Ferrite and/or prior austenite grain size are to be determined.[2]	Acceptance criteria is the reference.
	Tensile test	T	T[4]	In accordance with **Pt 2** of the Rules.[5] Yield strength, tensile strength, elongation, reduction in area and Y/T ratio are to be reported.	To meet the requirements in **Pt 2, Ch 1, 308.** of the Rules.
		B (Bottom)	T[4]		
	V-notch Charpy impact test[7]	T	P (Parallel) and T	The transition temperature curve of the absorbed energy and fracture surface ratio is to be determined by testing three pieces at each temperature.[8] (also the lateral expansion to be reported.) Furthermore, the test temperature is to include the temperature as specified in **Pt 2** of the Rules, and its interval is to be 10~20°C[9]	To meet the requirements in **Pt 2** of the Rules. Others are the reference.
		B			
	Strain ageing V-notch charpy impact test[6]	T	P or T	Same as V-notch Charpy impact test. However The test specimens which have been maintained for one hour at 250°C after strain of 5 % have been applied is, as a rule, to be used.[8][9]	Acceptance criteria is the reference.
Brittle fracture test	CTOD test	T	T(to the welding direction)	In accordance with the test method described in below **253. 3**.	In accordance with the test method described in below **253. 3**.
	NRL drop weight test	T	P	**ASTM E 208** or equivalent method. The NDTT(Non- Ductility transition temperature) is to be determined and photographs of the tested specimens are to be taken and enclosed with the test report.	Acceptance criteria is the reference. However no fracture to be occurred at the impact test temperature specified in **Pt 2** of the Rules.

Table 2.2.8 Test Items and Selection of Test Specimens (continued)

Approval test items		Position of the Sample(0)	Direction of the test specimens	Approval Testing method	acceptance criteria
Weldability test(6)	Weldment tensile test	T	T(to the welding direction)	In accordance with the test method described in below **253. 3**. For PWHT, the test is additionally to be carried out, if applicable.	In accordance with the test method described in below **253. 3**.
	Weldment impact test	T			
	Maximum hardness test	T	-		
	Macro structure	T	-		
	Hydrogen crack test	T	-	In accordance with the test method described in below **253. 3**.	In accordance with the test method described in below **253. 3**.

Notes

(0) The followings can be shown the example of the position (Top and Bottom) where the test samples are detached

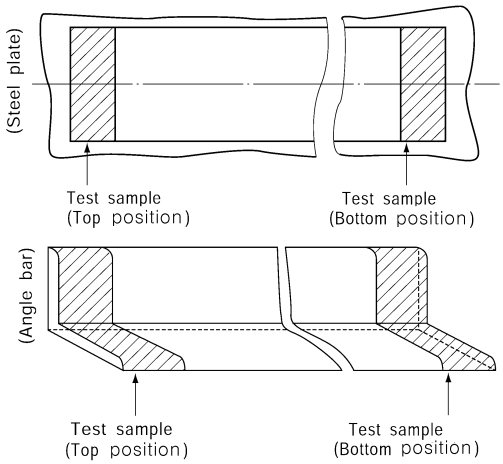

(1) Contents of *C, Mn, Si, P, S, Ni, Cr, Mo, Al, N, Nb, V, Cu, As, Sn, Ti, B, Zr, Bi, Pb, Ca, Sb, O, H* are to be reported.

(2) Other tests than Sulphur prints for segregation examination may be applied and subject to acceptance by the Society.

(3) The micrographs are to be representative of the full thickness. For thick products in general at least three examinations are to be made at surface, 1/4t and 1/2t of the product.

(4) Longitudinal direction for sections, bars, tubulars and rolled flats with a finished width of 600 mm or less.

(5) In case of tensile test specimens of bar steels taken from steels over 40 *mm* in thickness, test specimens are to be taken at the middle of thickness and in accordance with the requirements of **Part 2, Ch 1, 308.** of the Rules.

(6) Strain ageing test and weldability test are to be carried out on the thickest plate.

(7) Impact test for a nominal thickness less than 6 mm are normally not required.

(8) For plates having thickness higher than 40 *mm* one additional set of impact specimens is to be taken with the axis located at mid-thickness.

(9) Impact test temperatures on unstrained specimens(A) and strained specimens(B) for grades are as bellows ;

division	Grades	Direction	Test temp.(℃)			
(A)	*AH* 43 ~ *AH* 97	longitudinal and Transverse	+20	0	-20	-
	DH 43 ~ *DH* 97		0	-20	-40	-
	EH 43 ~ *EH* 97		0	-20	-40	-60
	FH 43 ~ *FH* 70		-20	-40	-60	-80
(B)	*AH* 43 ~ *AH* 97	longitudinal or Transverse	+20	0	-20	-
	DH 43 ~ *DH* 97		0	-20	-40	-
	EH 43 ~ *EH* 97		0	-20	-40	-60
	FH 43 ~ *FH* 70		-20	-40	-60	-80

Table 2.2.9 Weldability test Items, test methods and acceptance criteria

Test items	Direction of the test specimens	Test method	Acceptance criteria
Tensile test	T (Transverse)	In accordance with **Pt 2** of the Rules. 1 cross weld tensile test - 1 full thickness test sample or sub-sized samples cover the full thickness cross section.	To meet the requirements in **Pt 2, Ch 2, Sec 4** of the Rules
Charpy V-notch Impact test	T	(a) 1 set of 3 Charpy V-notch impact specimens transverse to the weld seam and 1-2 mm below the surface with the notch located at the fusion line and at a distance 2, 5 and 20 mm from the straight fusion line. An additional set of 3 Charpy test specimens at root is required for each aforementioned position for plate thickness t ≥ 50 mm. The test temperature is to be the one prescribed for the testing of the steel grade. (b) The fusion boundary is to be identified by etching the specimens with a suitable reagent.	To meet the requirements in **Pt 2, Ch 1, Sec 3, Table 2.1.35** of the Rules.
CTOD test	T	CTOD test specimens are to be taken from butt weld test assembly specified in **3** (1) (A) (b) or (B) (b). CTOD test is to be carried out in accordance with **EN ISO 15653** or equivalent. • the specimen geometry (B = W) is permitted for plate thickness up to 50 mm. For plate thicker than 50 mm, subsidiary specimen geometry (50x50 mm) is permitted, which is to be taken 50 mm in depth through thickness from the subsurface and 50 mm in width. See below figure for more details. 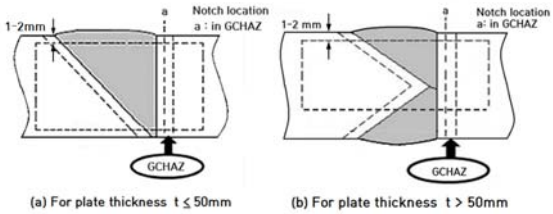 • the specimens are to be notched in through thickness direction • grain-coarsened HAZ (GCHAZ) is to be targeted for the sampling position of the crack tip • the test specimens are to be in as-welded and post-weld heat treated, if applicable • three tests shall be performed at -10°C on each butt weld test assembly For the steels specified yield point of 690 N/mm^2 and above, dehydrogenation of as-welded test pieces may be carried out by a low temperature heat treatment, prior to CTOD testing. Heat treatment conditions of 200 °C for 4 h are recommended, and the exact parameters are to be notified with the CTOD test results.	The results are to comply with the requirements of the scheme of initial approval.

Table 2.2.9 Weldability test Items, test methods and acceptance criteria (continued)

Test items	Direction of the test specimens	Test method	Acceptance criteria
Maximum hardness tests	-	Hardness tests HV10 across the weldment. The indentations are to be made along a 1-2 mm transverse line beneath the plate surface on both the face side and the root side of the weld as follows: - Fusion line - HAZ : at each 0.7 mm from fusion line into unaffected base material (6 to 7 minimum measurements for each HAZ)	(a) For the steels specified yield point of 420 N/mm^2 ~ 460 N/mm^2 : The maximum hardness value is not to be higher than 350HV (b) For the steels specified yield point of 500 N/mm^2 ~ 690 N/mm^2 : The maximum hardness value is not to be higher than 420HV (c) For the steels specified yield point of 890 N/mm^2 ~ 960 N/mm^2 : The maximum hardness value is not to be higher than 450HV
Macro structure tests	T	A sketch of the weld joint depicting groove dimensions, number of passes, hardness indentations should be attached to the test report together with photo-macrographs of the weld cross section.	To be free from crack, incomplete penetration, lack of fusion, other harmful defects
Hydrogen crack test	-	Testing in accordance with national and international recognised standards such as **GB/T4675.1** and **JIS Z 3158** for Y-groove weld crack test. Minimum preheat temperature is to be determined and the relationship of minimum preheat temperature with thickness is to be derived.	The results are to comply with the requirements of the scheme of initial approval.

Section 3 Steel Tubes and Pipes

301. Application

The requirements in this Section apply to tests and inspection for the approval of manufacturing process of steel tubes and pipes as specified in **Pt 2, Ch 1, Sec 4** of the Rules.

302. Data to be submitted

1. The following reference data in addition to those specified in **102.** are to be submitted to the Society.
   (1) Kind of products (e.g. Material grade, etc.)
   (2) Method of melting process
   (3) Method of ingot casting
   (4) Fabrication method of steel tubes and pipes (Fabrication method is to be classified seamless steel tubes and pipes, welded steel tubes and pipes, electric-resistance welded steel tubes and pipes, etc. For welded steel tubes and pipes or electric-resistance welded steel tubes and pipes, welding working standards are to be included.)
   (5) Method of heat treating, etc.
2. Where raw materials for steel tubes and pipes are provided from multi-source or any part of the manufacturing process is assigned to other companies or other manufacturing plants, the manufacturer is to submit the documents for identification system for its traceability.

303. Approval tests

1. Selection of test samples

(1) The test samples used for the approval test are to be selected, in the presence of the Surveyor, as a rule, from the steel tubes and pipes with the same conditions of material manufacturing process, fabrication method of tubes and pipes and heat treatment method.
(2) As a rule, the dimensions of the test sample are standardized according to the maximum manufactured outer diameter, the maximum manufactured thickness and the closest 1/2 of these values. Furthermore, the number of test pieces is to be as deemed appropriate by the Society.

2. Test

(1) Items of the approval test are to be as given in **Table 2.3.1** and are to be carried out in the presence of the Surveyor except otherwise specially provided.
(2) The test method and evaluation criteria are to be in accordance with the requirements in **Pt 2, Ch 1, Sec 4** of the Rules. However, where accordance with these requirements are difficult, decisions are left to the discretion of the Society.

304. Changes in the manufacturing process

In case changes occur in the approval content among manufacturing process of steel tubes and pipes which have been granted approval beforehand, such as those given in the following (1) through (8), the manufacturer is to submit the application of alteration to the Society together with the documents in response to the content of changes.
(1) Steel making process
(2) Ingot-making process
(3) Production process of tubes and pipes
(4) Limits of outer diameter and thickness
(5) Heat treatment process
(6) Chemical composition, added element, etc.
(7) Fabrication of steel tubes and pipes, heat treatment, etc. to outside manufacturers
(8) Use of raw materials manufactured by companies other than the ones verified in the approval tests (e.g. billet, rolled steel, etc.)
(9) Replace hydraulic test in product inspection with non-destructive test

305. Dealing after approval

Steel tubes and pipes which conform to the requirements in this Section are to be dealt with as [in

approved case] in the requirements in **Pt 2, Ch 1, 201. 3** (2) of the Rules, unless otherwise specified by the Society.

Table 2.3.1 Approval Test Items for Steel Tubes and Pipes

Steel tubes and pipes \ Test items		Base metal test										High temperature characteristics test		Corrosion resistance test
		Chemical analysis	Microstructure	Tensile test	Charpy impact test	Bend test	Flattening test	Flaring test	Reverse flattening	U-shaped bend test	Hydraulic test	High temp° tensile test	Creep test	Corrosion test
Steel tubes for boilers and heat exchangers	*RSTH* 33 ~ *RSTH* 52	○	○	○			○	○	○	○	○	○	○	
Steel pipes for pressure piping	*RST* 138 ~ *RST* 424	○	○	○		○	○				○	○	○	
Steel pipes for low temp. service	*RLPA* ~ *RLP* 9	○	○	○	○	○	○				○			
Stainless steel pipes	*RSTS* 304*TP* ~ *RSTS* 347*TP*	○	○	○	○	○	○				○			○
Headers	*RBH*-1 ~ *RBH* 6	○	○	○		○								

NOTES:

1. Approval tests for each steel tubes and pipes are to be performed for each test item indicated with a ○ mark in the Table. Moreover, the application of the flattening, flaring, reverse flattening and bending tests are to be in accordance with the requirements in **Pt 2, Ch 1, Sec 4** of the Rules. Also, high temperature tensile test and creep test are not applicable to Grade 1 and Grade 2 of steel pipes for pressure piping.
2. The U-shaped bend test method for steel tubes for boilers and heat exchangers is to comply with the requirements in the **KS D 3563**.
3. Where steel pipes for pressure piping and low temperature service have passed the tests for higher grade material with the similar strength level, pipe production method, heat treatment method, etc., the tests for steel pipes with lower grade may be omitted when deemed appropriate by the Society.
4. Where other steel tubes and pipes than those of the preceding **3.** have passed the tests for higher strength level with similar chemical composition (carbon steel or low alloy steel), pipe manufacturing process, heat treatment method, etc., the tests for those with lower strength level may be omitted, subject to submission of their acceptable data (i,e. specification of chemical composition and heat treatment, etc.) to the Society.
5. The high temperature tensile test and creep test as specified in the Table are performed for the purpose of evaluating high temperature characteristics of steel tubes and pipes, and these tests may be omitted in case appropriate technical reports are available or in case Society deems the tests unnecessary.
6. Where the steel tubes and pipes are not specified in the Rules or the steel tubes and pipes are used in special applications, tests other than those indicated in the Table (e,g, tests for welded parts) or the submission of reference data may be requested. Moreover, where low temperature toughness is considered necessary, the COD test is required.
7. Where the welded steel tubes and pipes are not specified in the Rules or the steel tubes and pipes are used in special applications, tests for weld joint other than those indicated in the Table are to be required.
   - Tensile test for butt weld joint
   - Flattening test
   - Charpy V-notch impact test (weld and HAZ)
   - Hardness test for butt weld joint
   - Micro and Macro test for butt weld joint
   - Non-destructive test for butt weld joint (RT and/or UT)

Section 4 Castings and Steel Forgings

401. Application

The requirements in this Section apply to tests and inspection for the approval of manufacturing process of castings and steel forgings as specified in **Pt 2, Ch 1, Sec 5** and **6** of the Rules.

402. Data to be submitted

The following reference data in addition to those specified in **102.** are to be submitted to the Society.

(1) Material grade of products, use and Max. mass
(2) Kind of products, Chemical composition and mechanical properties
(3) Method of heat treatment
(4) Purchaser's name of steel forgings and manufacturer's name of ingot
(5) Forging methods
(6) Data for mould and casting
(7) List of personnel in charge of the non-destructive test(holding of licence and its kind)

403. Factory

The provisions for the approval of the factory are applicable when any of factories specified in following (1) through (3) manufactures castings and steel forgings.

(1) Factory manufacturing these products by its own manufacturing facilities (including all manufacturing processes)
(2) Factory manufacturing these products by its own manufacturing facilities (including forging machine and heat treatment furnace, etc.), but steel ingots and blooms are to be purchased from other factories.
(3) Factory given in (1) or (2) above manufacturing these products by its own manufacturing facilities (including surface hardening treatment and heat treatment processes) using semi-finished products manufactured by others.
(4) The manufacturer who supply the raw materials(blooms, billets, slabs, etc.) of forgings is to obtain the Society's approval of manufacturing process of raw materials in accordance with the requirements in **Pt 2, Ch 1, Sec 2-2** of the Rules. In this case, in addition to the test items specified in **Table 2.2.4**, tensile test, impact test, hardness test and non-destructive tests are to be carried out additionally.

404. Classification of materials

The castings and steel forgings to comply with the requirements of the Section are classified as shown in **Table 2.4.1**.

Table 2.4.1 Kinds of Materials and Finished Products

Material classification		Product classification
Castings	Carbon steel castings	(1) Component parts for hull (e.g. stern frames, rudder frames, rudder stocks, etc.) (2) Component parts for general purpose - Component parts for cargo gears (e.g. gooseneck pins, gooseneck brackets, etc.) - Component parts for ships carrying liquefied gases in bulk. (3) Component parts for machinery - Component parts for diesel engines (e.g. connecting rods, piston rods, piston crowns, cylinder covers, etc.) - Crankshafts - Component parts for shafting (e.g. thrust shafts, intermediate shafts, propeller shafts, etc.) - Component parts for power transmission gears (e.g. reduction gears, reduction gear shafts, etc.) - Component parts for steam turbines (e.g. turbine rotors, turbine discs, turbine blades, etc.) - Component parts for piping (e.g. valves, pipe fittings, etc.) - Component parts for boilers and pressure vessels. - Pump casing
	Low-alloy steel castings	
	Stainless steel castings	
	Steel castings for low temperature service	
	Spheroidal graphite iron castings, grey iron castings	
Steel forgings	Carbon steel forgings	
	Low-alloy steel forgings	
	Stainless steel forgings	
	Steel forgings for low temperature services	

405. Approval tests

1. Approval tests are to be carried out as given in **Pt 2, Ch 1, Sec 5** and **6** of the Rules.

2. Impact test, macro structure test and/or hardness test, etc. may be additionally required by the Society where deemed necessary.

3. Selection of test samples and approval tests, in principle, are to be carried out in the presence of the Surveyor.

4. Approval tests for intermediated shaft material under special requirements *(2017)*

For alloy steel forgings which has a minimum specified tensile strength greater than 800 N/mm^2 but less than 950 N/mm^2 for use as intermediate shaft material in **Pt 5, Ch 3, 203.** and **Ch 4, 202.** and **Pt2, Ch 1, 601.** of the Rules, where special manufacturing processes are adopted to reduce shaft dimensions or higher permissible vibration stresses is to be required as following additional tests.

(1) Torsional fatigue test

A torsional fatigue test is to be performed to verify that the material exhibits similar fatigue life as conventional steels. The torsional fatigue strength of said material is to be equal to or greater than the permissible torsional vibration stress(τ_1 and τ_2) given by the formulae in **Pt 5, Ch 4, 202. 1.** of the Rules. The test is to be carried out with notched and unnotched specimens respectively. For calculation of the stress concentration factor of the notched specimen, fatigue strength reduction factor(β) is to be evaluated in consideration of the severest torsional stress concentration in the design criteria.

(A) Surface condition

Mean surface roughness is to be <0.2 μm Ra with the absence of localised machining marks verified by visual examination at low magnification(x20) as required by *Section 8.4* of *ISO 1352*.

(B) Test procedures are to be in accordance with *Section 10* of *ISO 1352*. Test conditions are to be in accordance with **Table 2.4.2**.

Table 2.4.2 Test condition

Loading type	Torsion
Stress ratio	R = -1
Load waveform	Constant-amplitude sinusoidal
Evaluation	S-N curve
Number of cycles for test termination	1 x 10^7 cycles

(C) Acceptance criteria

Measured high-cycle torsional fatigue strength τ_{C1} and low-cycle torsional fatigue strength τ_{C2} are to be equal to or greater than the values given by the following formulae:

$$\tau_{C1} \geq \tau_{1,\lambda=0} = \frac{T_s + 160}{6} C_k C_d$$

$$\tau_{C2} \geq \frac{1.7\tau_{C1}}{\sqrt{C_k}}$$

C_k : factor for the particular shaft design features

$C_k = 1.45/scf$

scf : stress concentration factor, see **Pt5, Ch4, 202. 3.** of Guidance(For unnotched specimen, 1.0)

C_d : size factor, see **Pt5, Ch4, 202. 1.** of the Rules

T_s : specified minimum tensile strength in $\mathrm{N/mm^2}$ of the shaft material

(2) Cleanliness requirements

Cleanliness requirements are to be in accordance with the requirements in **Pt 2, Ch 1, 601. 18.** of the Rules.

(3) Non-destructive inspection

No-destructive inspection is to be in accordance with the requirements in **Pt 2, Ch 1, 601. 10.** of the Rules.

406. Changes in the manufacturing process

In case changes occur in the approval content among manufacturing process of castings and steel forgings which have been granted approval beforehand, such as those given in the followings, the manufacturer is to submit the application of alteration to the Society together with the documents in response to the content of changes.

(1) Steel making process of castings, mould and casting method, treatment method and heat treatment method of ingot steel, etc.

(2) Purchaser's name of steel forgings and manufacturer's name of ingot, forging method and heat treatment method, etc.

(3) Max. mass of castings and steel forgings

407. Dealings after approval

Castings and steel forgings which conform to the requirements in this Section are to be dealt with as [in approval case] in the requirements in **Pt 2, Ch 1, 201. 3** (2) of the Rules, unless otherwise specified by the Society.

Section 5 Crankshafts under special requirements

501. Application

The requirements in this Section apply to the tests and inspection for the approval of crankshafts manufactured to reduce the dimension in accordance with the requirements of **Pt 5, Ch 2, 208**, **Pt 2, Ch 1, 501. 14** and **601. 14** of the Rules in case where the special manufacturing processes specified in the following (1) or (2) are adopted.

(1) The special forging process, namely continuous grain forging method (e.g. RR forging, TR forging or stamp forging), other than the free forging methods (block forging, upset & twisting forging and upsetting forging) used for manufacture of solid crankshaft and block forging method used for manufacture of semi-builtup crankshafts.

(2) The manufacturing processes using the surface treatments such as induction hardening, cold-rolling and nitriding. However, semi-builtup crank throw manufactured under special manufacturing process in the preceding (1) is excluded.

502. Data to be submitted

The manufacturer who intends to obtain an approval for the manufacturing process is to submit an application together with the data specified in **102.**, containing information of applicable engine type, or with the data showing the details of surface treatment in the case of **501.** (2).

503. Approval tests

1. Kinds of steel

The tests are to be carried out for each kind of steels as a standard practice. Even within the category of steel forgings, normalized steels (including annealed steels or annealed steels after normalization) and quenched and tempered steels are to be considered as different kind of steels. However, for example, in case where it is intended to obtain approval for carbon steel forgings in both *RSF* 520 and *RSF* 560, tests on *RSF* 560 which has a higher tensile strength are to be carried out as the standard procedure. The same principle is to apply in dealing with *Cr-Mo* steel forgings and *Ni-Cr-Mo* steel forgings.

2. Approval test for special forged crankshafts

(1) Test specimens
The test specimen, as standard, is to be taken from the crankthrow with the maximum diameter manufactured or close thereto.

(2) Tests
The following tests are to be carried out on each test specimen:

(A) Sulphur print test and macro-structure analysis (The specimens are to be taken from sections *A-A*, *B-B* and *C-C* specified in **Fig 2.5.1**)

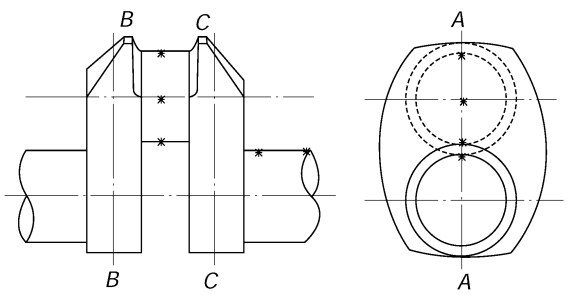

Fig 2.5.1 Sampling Positions

(B) Chemical composition analysis test (The specimens are to be taken from the positions asterisked in **Fig 2.5.1**)

(C) Micro-structure analysis (The specimens are to be taken from the positions asterisked in **Fig 2.5.1**)

(D) Microscopic test for the non-metallic inclusions (as per **KS D 0204**) (The specimens are to be taken from the positions asterisked in **Fig 2.5.1**)
(E) Hardness test (Positions in the vicinity of pin or journal surface. In the case of quenched and tempered steels, hardness distribution from the surface to the shaft centre.)
(F) Tensile test and impact test (Test specimens are to be taken as specified in **Fig 2.5.2** as the standard.)

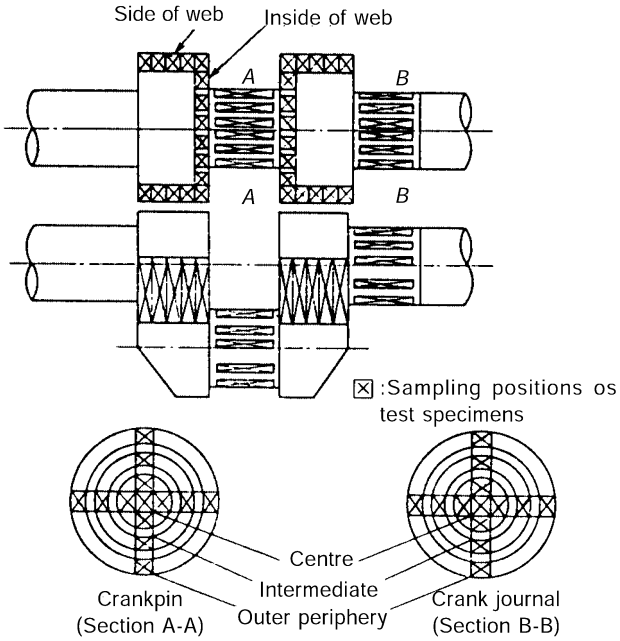

Fig 2.5.2 Sampling Positions of Test Specimens

(G) Bending fatigue test on actual crank throw. The number of test specimens is to be two or more
(H) Rotational bending fatigue test on small-size test specimens (Dia. 10 ~ 20 mm). The number of test specimens is to be not less than 10 as the standard. In case where previous data on this test are available or in case of carbon steel forgings, this test may be omitted upon approval of the Society. (**Fig 2.5.3**)

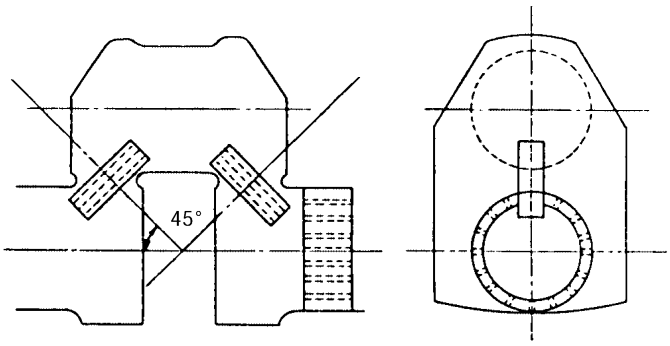

Fig 2.5.3 Sampling Positions of Bend Test Specimens

(3) Judgement of test results
The manufacturing process can be approved in case where the results of tests of the preceding (2) proves that the special forged crankshaft has continuous grain flow, the product quality is judged stable and the fatigue strength obtained from (2) (g) have improved by 20 % or more when compared with the fatigue strength of a free-forged crankshaft σ_w (N/mm^2) calculated by the following formula:

When $D \leq 100$, $\sigma_w = 196\left[1 + \frac{2}{3}\left(\frac{T_s}{440} - 1\right)\right]$

When $100 < D < 200$, $\sigma_w = \left(216 - \frac{D}{5.1}\right)\left[1 + \frac{2}{3}\left(\frac{T_s}{440} - 1\right)\right]$

When $D \geq 200$, $\sigma_w = 177\left[1 + \frac{2}{3}\left(\frac{T_s}{440} - 1\right)\right]$

where

D : Diameter of test specimen (mm)

T_s : Specified minimum tensile strength (N/mm^2)

3. Approval tests for crankshafts with surface treatments

This requirement applies to cases where the fillets of a crankshaft are applied with induction hardening, cold-rolling or nitriding, etc. In case where surface treatment is applied to all over the crankpin, journal and fillets, approval tests are to be as deemed appropriate by the Society.

(1) Test specimens
The requirements specified in **2** (1) apply correspondingly.

(2) Tests
The following tests are to be carried out on each test specimen:

(A) Non-destructive test (the conditions of defects on surface of the test specimens before and after the surface treatment are to be examined. The detection is to be either by magnetic particle test or liquid penetrant test.)

(B) Examination of the hardness distribution, depth of hardening and residual stress (Examination is to be carried out on the surface treated areas and their vicinity. Further, in case where cold-rolling is carried out, measurements for the deformation on the cold-rolling area are to be included.)

(C) Sulphur print test, microstructure test and macroscopic test (to be carried out on the sectional area in the direction of hardening depth.)

(D) Bending fatigue test on actual crank throw (tests are, in principle, to be carried out on both the crank throws with and without surface treatment. In this case, the number of test specimens are to be sufficient to verify the strength improvement ratio ρ specified in **Pt 5, Ch 2, 208. 1** of the Guidance relating to the Rules for the Classification of Steel Ships. In this connection, the torsional fatigue tests on the actual crank throws or the test specimens having sizes similar to them are also to be carried out.)

(E) Tensile test and impact test (one set of test specimens as to be taken from end portion of crankshaft with surface treatment.)

(3) Judgement of test results
The manufacturing process can be approved in case when the results of tests of preceding item (2) prove that a stability in the quality of the crankshafts with surface treatment and excellent improvement in the fatigue strength are obtained. In this case, the allowable stress is to be as specified in **Pt 5, Ch 2, 208. 1** of the Guidance relating to the Rules for the Classification of Steel Ships.

4. In case where the crankshaft manufactured under the special process as specified in the preceding **501.** (1) is applied with the surface treatment as specified in, **501.** (2), the judgement for acceptance is to be determined by considering the results of tests for free forged crankshaft with surface treatment and the strength of other positions of the crankshaft than the fillets thereof.

Section 6 Aluminium Alloys

601. Application

The requirements in this Section apply to the tests and inspection for the approval of manufacturing process of aluminium alloys as specified in **Pt 2, Ch 1, Sec 8** of the Rules.

602. Data to be submitted

The following reference data in addition to those specified in **102.** are to be submitted to the Society.
(1) Kind of the aluminium alloys (each material grade)
(2) Kind of products (plates, extruded shapes, etc.)
(3) Melting process
(4) Forming process

603. Approval test

1. Selection of test samples

(1) Test samples used for the approval test are to, as a rule, be taken in the presence of the Surveyor from aluminium alloy plates, shapes, etc., of each melt manufactured under the same conditions of the melting process and forming process.
(2) The plate thickness and dimensions for the test sample used in the approval test are, as a rule, to be maximum thickness and dimensions.

2. Details of test

(1) Items of the approval test are to be as given in **Table 2.6.1** and are to be carried out for each factory in the presence of the Surveyor except otherwise spacially provided.
(2) Testing method and acceptance criteria are to be in accordance with the **Table 2.6.2.**

604. Changes in the manufacturing process

In case changes occur in the approval content among manufacturing process of aluminium alloys which have been granted approval beforehand, the followings are to be submitted to the Society.
(1) Changes in the aluminium alloy making process
(2) Changes in the ingot-making process
(3) Changes in the rolling or extruding process
(4) Changes in the limit of thickness or dimension
(5) Changes in the heat treatment process
(6) Changes in the chemical composition, added element, etc.
(7) Subletting rolling, extruding, heat treatment, etc. to outside contractors
(8) Use of blooms and billets, etc. manufactured by other company

605. Dealings after approval

Aluminium alloys which conform to the requirements in this Section are to be dealt with as [in approval case] in the requirements in **Pt 2, Ch 1, 201. 2** (2) of the Rules, unless otherwise specified by the Society.

Table 2.6.1 Approval Test Items for aluminium alloys

Kinds	Grades	Temper	Test items									
			Chemical analysis	Macro-structure	Micro-structure	tensile test at room temp	Tensile test at low temp.(1)	Tensile test of notched round bar(1)	Tensile test in direction of thickness(1)	bend test	tear test(1)(2)	corrosion resistance test(3)
Rolled Product	5083*P*	*O*	○	○	○	○	○	○	○	○	○	
		*H*112	○	○	○	○				○		
		*H*116	○	○	○	○				○		○
		*H*321	○	○	○	○	○	○		○	○	○
	5086*P*	*O*	○	○	○	○				○		
		*H*112	○	○	○	○				○		
		*H*116	○	○	○	○				○		○
	5383*P*	*O*	○	○	○	○				○		
		*H*116	○	○	○	○				○		○
		*H*321	○	○	○	○				○		○
	5059*P*	*O*	○	○	○	○				○		
		*H*116	○	○	○	○				○		○
		*H*321	○	○	○	○				○		○
	5456*P*	*O*	○	○	○	○				○		
		*H*116	○	○	○	○				○		○
		*H*321	○	○	○	○				○		○
	5754*P*	*O*	○	○	○	○				○		
Extrude Product	5083*S*	*O*	○	○	○	○				○		
		*H*111	○	○	○	○				○		
		*H*112	○	○	○	○				○		
	5086*S*	*O*	○	○	○	○				○		
		*H*111	○	○	○	○				○		
		*H*112	○	○	○	○				○		
	5383*S*	*O*	○	○	○	○	○	○	○	○		
		*H*111	○	○	○	○				○		
		*H*112	○	○	○	○				○		
	5059*S*	*H*112	○	○	○	○				○		
	6005*AS*	*T*5	○	○	○	○				○		
		*T*6	○	○	○	○				○		
	6061*S*	*T*6	○	○	○	○				○		
	6082*S*	*T*5	○	○	○	○				○		
		*T*6	○	○	○	○				○		

Notes

(1) For aluminium alloys used at extremely low temperature such as tanks for liquefied gas carrier etc, tensile test at low temperature, tensile test of notched round bar, tensile test in the direction of thickness(thicker than 100 mm) and teat test are to carried out in addition.

(2) For tear test, other test may be applied subject to the approval by the Society.

(3) Where deemed necessary by the Society, tests related to fatigue tests, weld joint test, corrosion resistance tests and stress corrosion cracking test etc, or submission of reference data relating to these tests may be required.

Table 2.6.2 Approval Testing Method and Acceptance Criteria for aluminium alloy

Approval test items	Selection of test specimen		Testing method	
	Location	Direction(1)		
Chemical analysis	T(Top part)	-	Ladle analysis and product analysis are to be performed	Chemical composition by ladle analysis is to comply with the requirements in **Ch 8, Pt 2** of the Rules.
	B(Bottom part)			
Macro-structure	T	-	To be as deemed appropriate by the Society	To be as deemed appropriate by the Society
	B			
Micro-structure	T	-		
	B			
Tensile test at room temperature	T	Parallel	in accordance with **Pt 2** of the Rules.	In accordance with **Pt 2** of the Rules.
		Transverse		
	B	Parallel		
		Transverse		
Tensile test at low temperature	T	Parallel	The tensile tests are to be carried out at -196 °C by using of the tensile test specimens of same size and the same dimensions for tensile test at room temperature.	Reference
		Transverse		
	B	Parallel		
		Transverse		
Tensile test of notched round bar	T	Parallel	The tensile tests are to be carried out at -196 °C by using of the tensile test specimens of notched round bar with following notch Angle of notch : 60° Root radius of notch : 0.05 mm or less **ASTM E 602** or equivalent method.	
		Transverse		
	B	Parallel		
		Transverse		
Tensile test in direction of thickness	T	direction of	Test specimens are to be selected in the direction of thickness, and tensile tests are to be carried out. **ASTM A 770** or equivalent method.	
	B	thickness		
Bend test	T	Parallel	Bend test is to be in accordance with recognized national or international standard which the Society considers appropriate.(e.g. KS D 6701, etc.)	No crack is to be accepted.
		Transverse		
	B	Parallel		
		Transverse		
Tear test	T	Transverse	Tear strength and crack propagation energy are to be determined. Size and dimensions of tear test specimens and tear testing method are to be as deemed appropriate by Society. **ASTM B 871** or equivalent method.	Reference
	B	Transverse		
Corrosion resistance test	T	Parallel	Test method is to be as specified in **Pt 2, Ch 1, 801. 9.** of the Rules for the Classification of steel ships.	In accordance with **Pt 2, Ch 1, 801. 9.** of the Rules
	B	Parallel		

NOTES:
(1) When the test specimens used for the approval test can not be taken from the test samples because of their dimensions or shapes, the direction of the selection of test specimens to be determined on a case-by-case basis upon mutual consultation by the manufacturer and the Society.
(2) Excess difference in the chemical compositions between ladle analysis and product analysis is not to be accepted.

Section 7-1 Copper Alloy Castings

701. Application

The requirements in this Section apply to the tests and inspection for the approval of manufacturing process of copper alloy casting to be used for propellers, propeller blades and bosses as specified in **Pt 2, Ch 1, 702.** of the Rules.

702. Data to be submitted

The following reference data in addition to those specified in **102.** are to be submitted to the Society.

(1) Kind of the propeller castings (each material grade) and specifications
(2) General description on major manufacturing facilities (moulding, melting, casting, furnace and machining installations and their capacities)
(3) General description on the testing and inspection facilities (various testing and inspection equipments and installations)
(4) Repair and NDT procedures (if any)

703. Approval tests

1. Approval tests are to be in accordance with the **Table 2.7.1.**

Table 2.7.1 Approval Testing Method and Acceptance Criteria for copper alloy castings

Test item	Test method	Acceptance criteria
chemical composition	Analysis of chemical composition on ladles and separately cast test specimens is to be carried out	To comply with the Rule requirements
Tensile test	Tensile tests are to be carried out in accordance with the requirements specified in **Pt 2, Ch 1, 702. 6** of the Rules.	To comply with the Rule requirements
Micro-structure analysis	The micro structure of alloy types *CU* 1 and *CU* 2 shall be verified by determining the proportion of alpha phase. For this purpose, at least one specimen shall be taken from each heat. The proportion of alpha phase shall be determined as the average value of 5 counts.	To comply with the Rule requirements
Other test	To be as deemed appropriate by the Society	To be as deemed appropriate by the Society

2. Notwithstanding the requirements in the preceding **1** some parts of the tests may be omitted in case of propellers with a diameter of 2.5 m or less.

704. Dealings after approval

Copper alloy castings which conform to the requirements in this Section are to be dealt with as [in approval case] in the requirements in **Pt 2, Ch 1, 201. 2** (2) of the Rules, unless otherwise specified by the Society.

Section 7-2 Copper and Copper Alloy Tubes

711. Application

The requirements in this Section apply to the tests and inspection for the approval of manufacturing process of copper and copper alloy tubes as specified in **Pt 2, Ch 1, 701.** of the Rules.

712. Data to be submitted

The following reference data in addition to those specified in **102.** are to be submitted to the Society.

(1) Kind of copper and copper alloy tubes (each material grade)
(2) General description on the manufacturing facilities of raw materials (including the capacity of moulding, melting, casting facilities and furnace, etc.) and the reference data by which it can be assured how the material is produced.
(3) Method of manufacture (reheating of billet, heat treatment, finishing, etc)
(4) General description on the testing and inspection facilities (various testing and inspection equipments and installations)
(5) Repair and NDT procedures (if any)

713. Approval tests

1. Selection of test samples

(1) The test samples used for the approval test are to be selected, in the presence of the Surveyor, as a rule, from the copper and copper alloy tubes with the same conditions of material manufacturing process, fabrication method of tubes and heat treatment method.
(2) As a rule, the dimensions of the test sample are standardized according to the maximum manufactured outer diameter and 1/2 of this value. Furthermore, the number of test pieces is to be as deemed appropriate by the Society.

2. Approval tests

(1) Approval tests specified in **Table 2.7.2** are to be carried out, in the presence of the Surveyor unless otherwise specified by the Society.
(2) Testing method and acceptance criteria are to be in accordance with the **Table 2.7.3.** Where it is difficult to comply with test methods and evaluation criteria specified in this Section, the decision may apply to standards authorized by the Society. (officially recognized establishment).

Table 2.7.2 Approval Test Items for copper and copper alloy tubes

Grade	Approval test items									
	Chemical analysis	Tensile test	Elongation	Hardness test	Grain size	Flairing test(1)	Flattening test(2)	NDT(3)	Hydrogen embrittlement test	Season cracking
C1201	O	O	O	O	O	O	O	O	O	
C1220	O	O	O	O	O	O	O	O		
C2600	O	O	O	O	O	O	O	O(4)		O
C2700	O	O	O	O	O	O	O	O(4)		O
C2800	O	O	O			O	O	O(4)		O
C4430	O	O	O		O	O	O	O(4)		O
C6870	O	O	O		O	O	O	O(4)		O
C6871	O	O	O		O	O	O	O(4)		O
C6872	O	O	O		O	O	O	O(4)		O
C7060	O	O	O		O	O	O	O(4)		
C7100	O	O	O		O	O	O	O(4)		
C7150	O	O	O		O	O	O	O(4)		

Notes:
1. In case where not more than 100mm in outside diameter.
2. In case where more than 100mm in outside diameter.
3. Eddy current test is to be applied. However, hydrostatic or pneumatic test can be applied if agreed by the Surveyor.
4. In case where not more than 50mm in outside diameter.

Table 2.7.3 Approval Testing Method and Acceptance Criteria for copper and copper alloy tubes

<table>
<tr><th>Approval test items</th><th>Approval testing method</th><th>Acceptance criteria</th></tr>
<tr><td>Chemical analysis</td><td>Chemical analysis is to be carried out in accordance with the standards authorized by the Society (officially recognized establishment).</td><td>To meet the requirements in KS D 5301 or equivalent</td></tr>
<tr><td>Tensile test</td><td>In accordance with Pt 2, Ch 1 of the Rules.</td><td>To meet the requirements in Pt 2, Ch 1, Sec 7 of the Rules.</td></tr>
<tr><td>Elongation</td><td>In accordance with Pt 2, Ch 1 of the Rules.</td><td>To meet the requirements in Pt 2, Ch 1, Sec 7 of the Rules.</td></tr>
<tr><td>Hardness test</td><td>In accordance with KS B 0806 or equivalent. Hardness to be measured on the inner face of tube.</td><td>To meet the requirements in KS D 5301 or equivalent</td></tr>
<tr><td>grain size</td><td>In accordance with KS D 0202 or equivalent. Grain size to be measured on the longitudinal section of tube.</td><td>To meet the requirements in KS D 5301 or equivalent</td></tr>
<tr><td>Flaring test</td><td>In accordance with Pt 2, Ch 1, 401. of the Rules. The outside diameter of tube end after flaring is to comply with the requirement specified in bellow table.
<table>
<tr><th rowspan="2">Grade</th><th colspan="2">Outside diameter of tube end</th></tr>
<tr><th>D ≤ 20mm</th><th>20 < D ≤ 100mm</th></tr>
<tr><td>C1201, C1220</td><td>1.4 × D</td><td>1.3 × D</td></tr>
<tr><td>C2600, C2700, C2800</td><td>1.2 × D</td><td>1.15 × D</td></tr>
<tr><td>C4430, C6870, C6871, C6872, C7060, C7100, C7150</td><td colspan="2">1.25 × D</td></tr>
</table></td><td>To be free of surface crack.</td></tr>
<tr><td>Flattening test</td><td>In accordance with Pt 2, Ch 1, 401. Distance between flattening plates is to be 3 times of tube thickness.</td><td>To be free of surface crack.</td></tr>
<tr><td>Eddy current test</td><td>In accordance with KS D 0214 or equivalent. Test can be performed prior to heat treatment. Dimension of reference defect (diameter of drilled hole) is to comply with the requirements in KS D 5301 or equivalent.</td><td>To be free of harmful defects.</td></tr>
<tr><td>hydrostatic test</td><td>In accordance with Pt 2, Ch 1, 401. Permissible pressure of material, S is to comply with the requirement specified in bellow table.
<table>
<tr><th>Grade</th><th>S (N/mm^2)</th></tr>
<tr><td>C1201, C1220</td><td>41</td></tr>
<tr><td>C2600, C2700, C2800, C4430, C6870, C6871, C6872, C7060, C7100, C7150</td><td>48</td></tr>
</table></td><td>To be free of leakages.</td></tr>
<tr><td>Approval test items</td><td>Approval Testing method</td><td>acceptance criteria</td></tr>
<tr><td>pneumatic test</td><td>Pneumatic test is to be carried out with the air pressure of 0.4 MPa, maintained in the water for 5sec.</td><td>To be free of leakages.</td></tr>
<tr><td>Hydrogen embrittlement test</td><td>In accordance with KS D ISO 2626. Heat the test piece in a furnace with an hydrogen atmosphere, maintained at a temperature 850±25℃ for a period of 30 min. Polish the section, etch if desired, and examine under a microscope at magnification of 75~200 X.</td><td>There is no evidence of gassing or open grain structure characteristic of embrittlement.</td></tr>
<tr><td>season cracking</td><td>In accordance with KS D 5301 or equivalent.</td><td>To be free of surface crack.</td></tr>
</table>

714. Dealings after approval

Copper and copper alloy tubes which conform to the requirements in this Section are to be dealt with as [in approval case] in the requirements in **Pt 2, Ch 1, 201. 3** (2) of the Rules, unless otherwise specified by the Society.

Section 8 Special Cast Iron Valves

801. Application

The requirements in this Section apply to the tests and inspection for the approval of manufacturing process of special cast iron valves (black heart malleable castings and spheroidal graphite iron castings which has elongation of 12 % or above) specified in **Pt 5, Ch 5, 102. 4.** of the Rules.

802. Approval tests

Approval tests specified in **Table 2.8.1** are to be carried out to verify the material quality of special cast iron in the presence of the Surveyor. Tensile test and charpy impact test are to be carried out on the test specimens separately cast and on those taken from the valve body of the largest size.

Table 2.8.1 Approval Testing Method and Acceptance Criteria for special cast iron valves

Kinds	Test item	Test method	Acceptance criteria
Spheroidal graphite iron castings	Tensile test	The separately cast test sample is to be of A type specified in **KS D 4302.** Tensile test is to be carried out on two test specimens taken from test sample at room temperature (in case of boiler mounting valves, at each temperature of 200°C, 300°C and 400°C). Two test specimens (R 14A type specified in **Table 2.1.1 of Pt 2, Ch 1** of the Rules) for tensile test at room temperature are to be taken from the valve body. (the separately cast test sample is to be heat treated as same as applied to the valve body.)	To comply with the Rule requirements
	Charpy impact test	Three each test specimens of R 4 type specified in **Table 2.1.3** of **Pt 2, Ch 1** of the Rules are to be taken from test sample and flange of valve body.	To comply with the Rule requirements
	Hardness test	Valve body is to be cut and hardness at each position is to be measured (Brinnel Hardness Test, 3000 kg).	To comply with the Rule requirements
	Micro-structure analysis	Structural ferritization and spheroidization of graphite are to be examined.	To be as deemed appropriate by the Society
	chemical composition	For the analysis of total carbon, a drilling machine is not to be used.	To comply with the Rule requirements
Blackheart malleable iron castings	Tensile test	Test specimen is to be of A type specified in **KS D ISO 5922** and shall not be separately casted or machined unless approved by the Society. Two each test specimens are to be subjected to tensile test under the same temperature conditions as in Spheroidal graphite iron castings. The tensile test on the test specimens taken from valve body is to be as specified in Spheroidal graphite iron castings.	To comply with the Rule requirements
	Charpy impact test	The same as in Spheroidal graphite iron castings	To comply with the Rule requirements
	Hardness test	The same as in Spheroidal graphite iron castings	To comply with the Rule requirements
	Micro-structure analysis	Examination is to be carried out on the matrix and graphitization,	To be as deemed appropriate by the Society
	chemical composition	The same as in Spheroidal graphite iron castings	To comply with the Rule requirements

803. Dealings after approval

Special cast iron valves which conform to the requirements in this Section are to be dealt with as [in approval case] in the requirements in **Pt 2, Ch 1, 201. 2** (2) of the Rules, unless otherwise specified by the Society.

Section 9 Anchors

901. Application

1. The requirements in this Section apply to tests and inspection for the approval of manufacturing process of ordinary anchors made of steel castings as specified in **Pt 4, Ch 8, 302.** (1) of the Rules.

2. The anchor manufacturers who conform to the requirements in this Section are to be dealt with as the approved manufacturers of steel castings in accordance with the requirements in **Pt 2, Ch 1, 102.** of the Rules.

3. In case where the anchor is manufactured by the methods other than those rules specified in the preceding **1.**, the requirements of this Section can be applied.

902. Data to be submitted

The following reference data in addition to those specified in **102.** are to be submitted to the Society.

(1) Kinds and material grade of anchor(including drawing and dimension table of anchor)
(2) Maximum mass of the anchor
(3) Working standards for casting and heat treatments
(4) Non-destructive testing standards(including personnel requirements)
(5) Test data of sea bed holding power(if any)

903. Approval test

1. Approval test items, test methods and acceptance criteria are to be as given in **Table 2.9.1**

Table 2.9.1 Approval Testing Method and Acceptance Criteria for anchors

Test item	Test method and acceptance criteria
material test	(1) Anchors are to be manufactured and tested in accordance with the requirements in **PT 2, Ch 1, 501.** of the Rules and comply with the requirements for castings for welded construction. The steel is to be fine grain treated with Aluminium. (2) Unless otherwise agreed the test samples are to be either integrally cast or gated to the castings.
Drop test	in accordance with **Pt 4, Ch 8, 309. 2.** (1) of the Rules. Dropping is to be made for 3 attempts at least.
Hammering test	in accordance with **Pt 4, Ch 8, 309. 2.** (2) of the Rules.
Proof test	in accordance with **Pt 4, Ch 8, 309. 3.** of the Rules.
Visual inspection	in accordance with **Pt 4, Ch 8, 309. 4.** of the Rules.
Non-destructive test	To be carried out the extended non-destructive examination in accordance with **Pt 4, Ch 8, 309. 6.** of the Rules.

2. Impact test, macro structure test and/or hardness test, etc. may be additionally required by the Society where deemed necessary.

3. Selection of test samples and approval tests, in principle, are to be carried out in the presence of the Surveyor.

904. Dealings after approval

Anchors which conform to the requirements in this Section are to be dealt with as [in approval case] in the requirements in Pt 2, Ch 1, 201. 3. (2) of the Rules, unless otherwise specified by the Society.

Section 10-1 Marine Chains

1001. Application

1. The requirements in this Section apply to tests and inspection for the approval of manufacturing process of electrical welded and steel cast chains used for anchor chains and steering chains specified in **Pt 4, Ch 8, 405. 1** of the Rules.

2. Of those forge welded or other manufacturing process chains, the requirements in this Section correspondingly apply to the tests and inspection for the approval of the manufacturing process of chains.

3. The manufacturer who makes steel cast chains in accordance with the requirements of this Section may be considered to comply with the requirements of manufacturing process in **Pt 2, Ch 1, 102.** of the Rules.

1002. Data to be submitted

The following reference data in addition to those specified in **102.** are to be submitted to the Society.

(1) Kind of chains
(2) Manufacturing process
(3) Materials
(4) Heat treating method (including furnace types, means of specifying, controlling and recording of temperature and chain speed and allowable limits, quenching bath and agitation, cooling method after exit)
(5) Diameter of test chain, maximum chain diameter
(6) In addition to the above, the following reference data are to be submitted to the Society according to the manufacturing process.
  (A) Electrically welded chains
    (a) Manufacturing process and manufacturing facilities
      (i) Explanations on manufacturing process
      (ii) Outline of the manufacturing factory
      (iii) Principal items of manufacturing and inspection facilities other than welding machines (tensile testing machine of chains, preheater, bending machine, stud applier, etc.)
    (b) Welding machines
      (i) Name and type of welding machine, and name of its manufacturer
      (ii) Particulars of welding machine (output, pressurizing force, retaining force)
      (iii) Pressurizing mechanism (drawings are to be attached)
      (iv) Diameter of chain link weldable
    (c) Working standards
      (i) Inspection organization chart
      (ii) Contents of inspection at the reception of raw materials
      (iii) Bar cutting, heating and bending including method, temperatures, temperature control and recording
      (iv) Working standards applicable to each size of chain link for flash butt welding (welding current, force, time, flash allowance, upsetting allowance, preheating temperature and period, etc.)
      (v) Flash removal incl method and inspection
      (vi) Stud manufacturing process and dimensions
      (vii) Stud insertion and welding standards
      (viii) Details of product inspection
  (B) Cast chains
    (a) Manufacturing process and manufacturing facilities
      (i) Explanations on manufacturing process
      (ii) Outline of manufacturing factory

(iii)Principal manufacturing and inspection facilities

(b) Steelmaking

(i) Type and capacity of steelmaking furnace

(ii) Steelmaking process

(iii)Range of chemical composition

(c) Working standards

(i) Moulding work

(ii) Casting procedure (drawing showing the location and its dimensions of riser is to be attached.)

(iii)Finishing work

(iv)Details of product inspection

(v) Repairing procedures

1003. Approval test

1. Approval test

The approval test is to be carried out on each chain under application for each manufacturing factory. The contents of approval test are to be as indicated in **Table 2.10.1** and the test is to be carried out in the presence of the Surveyor unless otherwise specified.

2. Test chains

The link and test specimens used in the approval test are to be taken from the test chains in the presence of the Surveyor.

3. Omission of approval test for manufacturing process

(1) When the test for Grade 1 chains has been passed, the approval test for manufacturing process for studless chains of the same or of the smaller diameter manufactured by the same electric welding method may be omitted.

(2) When the test for Grade 2 chains has been passed, the approval test for manufacturing process for studless chains of the same or of the smaller diameter manufactured by the same electric welding method and the approval test for the manufacturing process of Grade 1 chains, may be omitted.

(3) The manufacturing process of the enlarged link and end link may be approved up to those with the diameter corresponding to that of common link provided that they are manufactured by the same manufacturing process of the common link or by the electric welding method.

1004. Changes in the approval content

When major changes are intended to be made in the manufacturing process already approved, the application procedure required for a new approval application is to be taken. The major changes include the items given below where, however, the witness of the approval test by the Surveyor may be dispensed with, or reduction in the approval test items may be accepted for the manufacturer whose product quality control standards and inspection standards are considered appropriate. In this case, however, submission of the results of tests on material properties and related data is required.

(1) Increase in the maximum diameter of chain to be manufactured

(2) Change in casting procedure

(3) Changes in heat treatments (quenching, annealing, tempering, etc.)

(4) New installation of welding machine

(5) New installation of furnace for heat treatment

(6) Other changes for which approval test is considered necessary

Table 2.10.1 Approval Test Items and Acceptance Criteria for Marine Chains

Test chains for approval test

No.1 No.2 No.3 No.4 No.5 ..... No.32 No.33 No.34

Test item			Numbers of test specimens	Numbers of test link(example)	Selection of test specimen and details of test specimen	Test procedure	Acceptance criteria
Mechanical properties test of llink	Base metal	①Tensile test	1	No.1	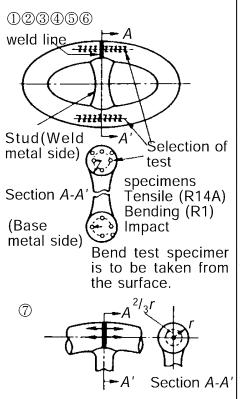	①, ②, ④, ⑤ : To conform to **Pt 2, Ch 1** of the Rules, The bending radius of chain is to be 25 mm. And the bending angle is to be not less than following angle : 120°. ③, ⑥ : Testing temperature of impact test is to be refered to NOTES 6. ⑦ : is to be examined at its center and the point 2/3 r for the structure of HAZ, base metal and weld zone (× 100) ⑧ : Welded portion of link in longitudinal section is to be macroetched. ⑨ : Sulphur print of longitudinal section of link is to be taken. ⑩ : Hardness distribution of base metal and weld zone is to be measured at proper intervals.	To conform to **Pt 2, Ch 1** of the Rules.
		②Bending test	1	No.1			To be free of harmful defects
		③Impact test	1set(Grade 1 chain) 3sets(Others)	No.3~4			see NOTES 6.
	Weld zone	④Tensile test	2	No.1			Measured tensile strength is to exceed that of the base metal.
		⑤Bending test	2	No.2			To be free of harmful defects
		⑥Impact test	1set(Grade 1 chain) 3sets(Others)	No.3~4			see NOTES 6.
		⑦Micro-test	2	No.5			Coarse grain area in HAZ and degree of heat treatment are to be examined.
		⑧Macro test	1	No.5			To be free of harmful defects
		⑨Sulphur print	1	No.7			To be free of harmful defects
		⑩Hardness test	3	No.5			For reference only.
Test of testing object of chains		⑪Proof test	2 lengths	No.1~5 No.9~13		⑪, ⑫, ⑭, ⑮ : To conform to **Pt 4, Ch 8** of the Rules. ⑬ : After proof test, chain length and dimensions of each link are to be measured.	To conform to **Pt 4, Ch 8** of the Rules.
		⑫Breaking test	2 lengths	No.15~19 No.30~34			Actual breaking load is to be measured in addition to conform to **Pt 4, Ch 8** of the Rules.
		⑬Dimension test	2 lengths	No.1~5 No.9~13			Check dimensional changes in addition to conform to **Pt 4, Ch 8** of the Rules.
		⑭Mass inspection	2 lengths	No.1~5 No.9~13			To conform to **Pt 4, Ch 8** of the Rules.
		⑮Visual inspection	2 lengths	No.1~5 No.9~13			To conform to **Pt 4, Ch 8** of the Rules.

NOTES;

1. The test links used in the aproval test are to, in principle, be of the desired largest diameter for approval.
2. In the case of cast links, their mechanical properties tests are to be carried out in a manner corresponding to those applied to weld zone. Of those items of test on the testing object, the bending test and compression test may be substituted by magnetic particle testing.
3. When deemed necessary by the Society, non-destructive testing may be requested.
4. In the case of the approval test in association with the change in the manufacturing process as shown in **1004.**, the diameter and number of test link, or the approval test items may be reduced.
5. When steel materials, manufacturing process or heat treatment methods which are not specified in the Rules are to be employed, the Society may request other tests or submission of reference materials in addition to the specified test items.
6. Temperatures of impact test are to be in accordance with following tables.

Kind of chain	Temperature	Minimum absorbed average energy (J)	
		Base metal	Flash butt weld zone
Grade 1 chain	0°C	To be with reference	To be with reference
Grade 2 chain	20°C, 0°C and -20°C	At 0°C to be of 50J, At other temperature to be with reference.	To be with reference
Grade 3 chain	20°C, 0°C and -20°C	At 0°C to be of 60J, At other temperature to be with reference.	At 0°C to be of 50J, At other temperature to be with reference.

Section 10-2 Marine Chain Accessories

1011. Application

1. The requirements in this Section apply to the tests and inspection for the approval of manufacturing process of the connecting shackles, kenter shackles, anchor shackles and swivels (hereinafter referred to as the "chain accessories") specified in **Pt 4, Ch 8, 405. 4** of the Rules.

2. The requirements in this Section apply to the manufacturing process of the enlarged link and end link are manufactured by a chain accessories manufacturer other than the manufacturer of the chain.

3. The manufacturer who makes cast chains in accordance with the requirements of this Section may be considered to comply with the requirements of manufacturing process in **Pt 2, Ch 1, 102.** of the Rules.

1012. Data to be submitted

The following reference data in addition to those specified in **102.** are to be submitted to the Society including (1) to (5) of **1002.**

(1) Cast chain accessories
To be in accordance with the provisions in **1002.** (6) (B).

(2) Forged chain accessories
(A) Manufacturing process and facilities
(a) Explanations on the manufacturing process
(b) Outline of the manufacturing factory
(c) Principal forging facilities and their capacities
(d) Type and capacity of the furnace for heat treatments
(e) Inspection and testing facilities
(B) Work standards
(a) Details of acceptance inspection for raw materials (bloom, billet, round bar steel, etc.) and names of their suppliers
(b) Forging procedure (drawings to be attached)
(c) Heat treatment procedures and their control standards
(d) Details of product inspection

1013. Approval test

1. Approval test

The approval test is to be carried out on each item of chain accessories under application for each manufacturing factory. The details of approval test are to be as indicated in **Table 2.10.2** and the test is to be carried out in the presence of the Surveyor unless otherwise specified.

2. Test chain accessories

The test specimens used in the approval test are to be taken from the test chain accessories under application in the presence of the Surveyor.

3. Omission of approval test

(1) When the test for chain accessories of higher grade has been passed, the approval test for manufacturing process for chain accessories of the same or of the smaller diameter manufactured by the same casting or forging method may be omitted.
(2) When the test either for swivel or for kenter shackle has been passed, the approval test for manufacturing process for another product not subjected to approval test may be omitted provided that discrimination between the casting procedure and forging procedure is specified.
(3) When the test either for swivel or for kenter shackle has been passed, the approval test for manufacturing process for the enlarged link and end link of the same diameter as that of the swivel and kenter shackle or less may be omitted.
(4) When the test for anchor shackle has been passed, the approval test for manufacturing process of the connecting shackle of the same diameter thereof or less may be omitted.
(5) When the test either for connecting shackle or anchor shackle has been passed, the approval test

for manufacturing process of the enlarged link and end link of the same diameter there of or less may be omitted.

(6) The diameter of the chain accessories shown in items (1) through (5) above corresponding to that of the common link to which they are fitted.

1014. Changes in the manufacturing process

Where major changes significantly affecting the manufacturing process already approved have been made, the requirements in **1004.** are to apply.

Table 2.10.2 Approval Test Items and Acceptance Criteria for Marine Chains Accessories

Test item		Numbers of test specimens	Selection of test specimen and details of test specimen	Test procedure	Acceptance criteria
Mechanical properties test of chain accessories	①Tensile test	2	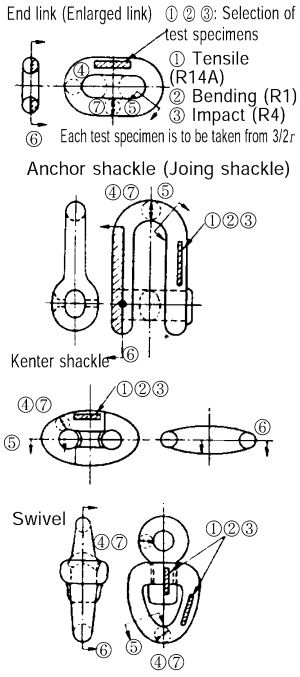	① and ② : To conform to **Pt 2, Ch 1** of the Rules, The bending radius of chain accessories is to be 25mm. And the bending angle is to be not less than following angle : 120°. ③ : Testing temperature of impact test is to be refered to NOTES 6. ④ : To be examined at its surface, 2/3 r and center (magnifying power : × 100) ⑤ : Areas shown in the figure are to be macroetched. ⑥ : Sulphur print of the chain accessory in longitudinal section is to be taken. ⑦ : Hardness distribution in diametric direction is to be measured at proper intervals. ⑧, ⑨, ⑪ : To conform to **Pt 4, Ch 8 Sec 4** of the Rules. ⑩ : Measurements of each part of chain accessories after subjected to proof test are to be taken for dimensions.	To conform to **Pt 2, Ch 1** of the Rules.
	②Bending test	2			To be free of harmful defects
	③Impact test	see NOTES 6			see NOTES 6.
	④Micro-test	3			The degree of heat treatment in diametric direction is to be examined.
	⑤Macro test	1			To be free of harmful defects.
	⑥Sulphur print	1			To be free of harmful defects.
	⑦Hardness test	1			For reference only.
Tests on testing object of chain accessories	⑧Proof test	1			To conform to **Pt 4, Ch 8** of the Rules.
	⑨Breaking test	1			1.1 times of the specified breaking load is omly required to be loaded, and no actual breaking is required.
	⑩Dimension inspection	1			To conform to **Pt 4, Ch 8** of the Rules. In addition, dimensional changes are to be measured.
	⑪Visual inspection	1			To conform to **Pt 4, Ch 8** of the Rules.

NOTES;

1. The test chain accessories used for approval test are to, in principle, be two or three, in number, of the larges diameter under application.
2. The Society, when deemed necessary, may request nondestructive test.
3. In the case of the approval test required in connection with the change in the manufacturing process as shown in **1004.**, the Society may reduce the requirements in the diamter and number of test chain accessories with respect to the test itmes.
4. When any steel materials, manufacturing process or haat treatment not specified in the Rules are intended to be used, the Society may request other testing procedure or submission of reference data in addition to those specified in the Rules.
5. Two specimens for each test of tensile test specimens, bending test specimens and Charpy V-notch impact test specimens are to be taken from the test samples specified in Pt 2, Ch 1, 502. & 603. of the Rules, on both cast and forged chain accessories, tested to satisfy the specified values in addition to the mechanical properties tests given in this Table.
6. Temperature of impact test are to be in accordance with following tables.

Kind of chain accessories	Number of test specimen	Temperature	Minimum absorbed average energy (J)
Grade 2 chain accessories	1 set	0°C	To be with reference
Grade 3 chain accessories	2 set	0°C and -20°C	At 0°C to be of 60J, At other temperature to be with reference

Section 10-3 Offshore Chains and Chain Accessories

1021. Application

1. The requirements in this Section apply to the tests and inspection for the approval of manufacturing process of the offshore chain and chain accessories (hereinafter called chains and chain accessories) specified in **Pt 4, Ch 8, 401. 2** of the Guidance.

2. Chains and chain accessories are to comply with the additional requirements, which are **1001.** for offshore chains and **1011.** for offshore chain accessories, other than the above **1.**

1022. Materials

1. Kind of materials, mechanical properties used in chains and chain accessories are to comply with **Pt 2, Annex 2-9** of the Guidance.

2. Manufacturers propriety specifications for R4S and R5 may vary subject to design conditions and the acceptance of the Society.

3. Each grade is to be individually approved. Approval for a higher grade does not constitute approval of a lower grade. If it is demonstrated to the satisfaction of the Society that the higher and lower grades are produced to the same manufacturing procedure using the same chemistry and heat treatment, consideration will be given to qualification of a lower grade by a higher. The parameters applied during qualification are not to be modified during production. *(2017)*

1023. Chain Approval of manufacturing process

1. Chains are to be manufactured only by works approved by the Society.

2. Data to be submitted

(1) Kind of chains
(2) Manufacturing process
(3) Materials
(4) Heat treating method (including furnace types, controlling and recording of temperature and chain speed and allowable limits, quenching bath and agitation, cooling method after exit)
(5) Diameter of test chain, maximum chain diameter
(6) In addition to the above, the following reference data are to be submitted for approval and review to the Society.
  (A) Bar heating and bending including method, temperatures, temperature control and recording
  (B) Proof and break loading including method, method of measurement, and recording
  (C) Manufacturer''s surface quality requirement of mooring components
  (D) Manufacturing process, manufacturing facilities and Welding machines description according to **1001.** (6) (A) (a) and (b)
  (E) Working standards
    (a) Inspection organization chart
    (b) Contents of inspection at the reception of raw materials
    (c) Bar cutting, heating and bending including method, temperatures, temperature control and recording
    (d) Working standards applicable to each size of chain link for flash butt welding (welding current, force, time, flash allowance, upsetting allowance, preheating temperature and period, maintenance procedure and programme for welding machine, etc.) *(2017)*
    (e) Flash removal including method and inspection
    (f) Stud manufacturing process and dimensions
    (g) Stud insertion method for stud link chain
    (h) Non-destructive examination procedures
    (i) Details of product inspection
    (j) The manufacturer's procedure for removing and replacing defective links without heat treatment of the entire chain. *(2017)*

3. Calibration of furnaces

(1) Calibration of furnaces is to be verified by measurement and recording of a calibration test piece with dimensions equivalent to the maximum size of link manufactured.

(2) The manufacturer is to be submitted a procedure for furnace temperature surveys which is to be included the following requirements *(2017)*

(A) The temperature uniformity of furnaces is to be surveyed whenever approval of manufacturer is requested and at least annually during normal operating conditions.

(B) Furnaces are to be checked by conveying a monitoring link instrumented with two thermocouples through the furnaces at representative travel speed.

(C) One thermocouple is to be attached to the surface of the straight part and one thermocouple is to be imbedded in a drilled hole located at the mid thickness position of the straight part of the calibration block.

(D) The time-temperature curves are to be showed that the temperatures throughout the cross section and the soaking times are within specified limits as given in the heat treatment procedure.

4. Approval test

(1) Approval test

The approval test is to be carried out on each chain under application for each manufacturing factory. The contents of approval test are to be as indicated in **Table 2.10.3** and the test is to be carried out in the presence of the Surveyor unless otherwise specified.

(2) Test chains

The link and test specimens used in the approval test are to be taken from the test chains in the presence of the Surveyor.

5. Changes in the approval content

When major changes are intended to be made in the manufacturing process already approved, the application procedure required for a new approval application is to be taken. The major changes include the items given below where, however, the witness of the approval test by the Surveyor may be dispensed with, or reduction in the approval test items may be accepted for the manufacturer whose product quality control standards and inspection standards are considered appropriate. In this case, however, submission of the results of tests on material properties and related data is required.

(1) Increase in the maximum diameter of chain to be manufactured
(2) Change in casting procedure
(3) Changes in heat treatments (quenching, annealing, tempering, etc.)
(4) New installation of welding machine
(5) New installation of furnace for heat treatment
(6) Other changes for which approval test is considered necessary

1024. Approval of quality system at chain and accessory manufacturers

Chain and accessory manufacturers are to have a documented and effective quality system approved by **Ch 2, 104. 2.** The quality system is to be additionally submitted during witnessing of tests by Surveyor in order to approve the chain and chain accessories.

1025. Approval of rolled bar for offshore chain *(2017)*

1. If a chain manufacturer wishes to use material from a number of suppliers, separate approval tests must be carried out for each supplier.

2. Approval will be given only after successful approval of manufacturing process of testing of the completed chain. Each Grade is to be individually approved. Approval for a higher grade does not constitute approval of a lower grade. If it is demonstrated to the satisfaction of the Society that the higher and lower grades are produced to the same manufacturing procedure using the same chemistry and heat treatment, consideration will be given to qualification of a lower grade by a higher.

3. The parameters applied during qualification are not to be modified during production. The approval will normally be limited to a thickness equal to that of the bars tested. up to the maximum diameter equal to that of the chain diameter tested. The rolling reduction ratio is to be recorded and is

to be at least 5:1 for R3, R3S, R4, R4S and R5. The rolling reduction ratio used in production can be higher, but should not be lower than that qualified.

4. A heat treatment sensitivity study simulating chain production conditions shall be applied in order to verify mechanical properties and establish limits for temperature and time combinations. All test details and results are to be submitted to the Society.

5. The bar manufacturer is to provide evidence that the manufacturing process produces material that is resistant to strain ageing, temper embrittlement and all test details and results are to be submitted to the Society.

1026. Approval of forges and foundries for chain accessories

1. Forges and foundries intending to supply finished or semi-finished accessories are to be approved by the Society. The approval is to be limited to a nominated supplier of forged or cast material. If an accessory manufacturer wishes to use material from a number of suppliers, a separate approval must be carried out for each supplier.

2. Approval will be given only after successful testing of the completed accessory. Approval for a higher grade does not constitute approval of a lower grade. If it is demonstrated to the satisfaction of the Society that the higher and lower grades are produced to the same manufacturing procedure using the same steel specification, supplier and heat treatment, consideration will be given to qualification of a lower grade by a higher. *(2017)*

3. The approval will normally be limited to the type of accessory and the designated mooring grade of material up to the maximum diameter or thickness equal to that of the completed accessory used for qualification unless otherwise agreed by the Society. However for the different accessories that have the same geometry, the tests for initial approval are to be carried out on the one having the lowest reduction ratio. Qualification of accessory pins to maximum diameters is also required. Individual accessories of complex geometries will be subject to the Society requirements. *(2017)*

4. Forges and foundries are to provide evidence that the manufacturing process produces material that is resistant to strain ageing, temper embrittlement and for R4S and R5 grades, hydrogen embrittlement. A heat treatment sensitivity study simulating accessory production conditions shall be applied in order to verify mechanical properties and establish limits for temperature and time combinations. (Cooling after tempering shall be appropriate to avoid temper embrittlement). All test details and results are to be submitted to the Classification society.

5. For initial approval, Three CTOD tests are to be tested in accordance with a recognized standard such as BS 7448 Part 1 & BS EN ISO 15653:2010. The specimen location is as shown in **Table 2.10.3** notes 7. For rectangular accessories, the CTOD test piece is to be a standard 2 x 1 single edge notched bend specimen of thickness equal to full thickness of material to be tested. Subsized specimens can be used subject to approval of the Society. For circular geometries, the minimum cross section of the test piece is to be 50 × 25 mm for accessory diameters less than 120 mm, and 80 × 40 mm for diameters 120 mm and above. The tests are to be taken at minus 20 ℃ and the results are to be submitted to the Society. The minimum values of each set of three specimens are to at least meet the requirements same as that of the studless chain material shown in **Table 2.10.3**. The geometry of accessories can vary. **Fig 2.10.1** a) and b) show the CTOD location for circular and rectangular cross sections such as those of the D-shackle and accessories fabricated from rectangular sections. The orientation of the specimen is to be considered the direction of the grain flow. **Fig 2.10.1** b) shows two possible sampling positions for CTOD test specimens with notch orientation for rectangular type accessories. *(2017)*

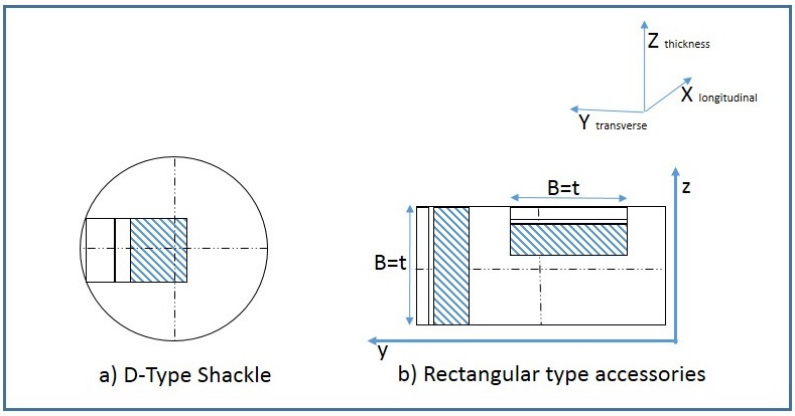

Fig 2.10.1 Location of CTOD test specimens (B corresponds to the thickness of material, the grain flow is considered in the longitudinal direction X)

6. Calibration of furnaces is to be verified by measurement and recording of a calibration test piece with dimensions equivalent to the maximum size of link manufactured. Thermocouples are to be placed both on the surface and in a drilled hole located to the mid thickness position of the calibration block. The furnace dimensions are to be such as to allow the whole furnace charge to be uniformly heated to the necessary temperature. Temperature uniformity surveys of heat treatment furnaces for forged and cast components are to be carried out according to **API Spec 6A/ISO 10423 Annex M** or **ASTM A991**. The initial survey is to be carried out with maximum charge (load) in the furnace. Subsequent surveys are to be carried out annually and may be carried out with no furnace charge. *(2017)*

7. Approval test

(1) Approval test
The approval test is to be carried out on each item of chain accessories under application for each manufacturing factory. The details of approval test are to be as indicated in **Table 2.10.4** and the test is to be carried out in the presence of the Surveyor unless otherwise specified.

(2) Test chain accessories
The test specimens used in the approval test are to be taken from the test chain accessories under application in the presence of the Surveyor.

8. Changes in the manufacturing process

Where major changes significantly affecting the manufacturing process already approved have been made, the requirements in **1023. 5** are to apply.

Table 2.10.3 Approval Test Items and Acceptance Criteria for Offshore Chains *(2017)*

Test chains for approval test

No.1 No.2 No.3 No.4 No.5 ..... No.32 No.33 No.34

Test item			Numbers of test specimens	Numbers of test link(example)	Selection of test specimen and details of test specimen	Test procedure	Acceptance criteria
Mechanical properties test of link	Base metal	① Tensile test	1	No.1	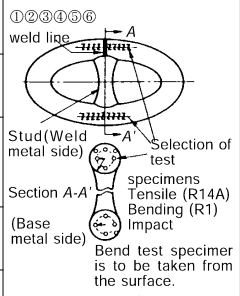	①, ②, ④, ⑤ : To conform to Pt 2, Ch 1 of the Rules, The bending radius of Grades R3, R3S & R4 chain accessories is to be 25mm. Grade R4S and R5 chains are to be as deemed appropriate by the Society. And the bending angle is to be not less than following angle : 30° for Grade R4, 45° for Grade R3S, 60° for Grade R3. And Grade R4S and R5 chains are to be as deemed appropriate by the Society. ③, ⑥ : Testing temperature of impact test is to be refered to NOTES 6. ⑦ : is to be examined at its center and the point 2/3 r for the structure of HAZ, base metal and weld zone (× 100) ⑧ : Welded portion of link in longitudinal section is to be macroetched. ⑨ : Sulphur print of longitudinal section of link is to be taken. ⑩ : Hardness distribution of base metal and weld zone is to be measured at proper intervals. ⑪ : To be comply with Notes 7	To conform to **Pt 2, Ch 1** of the Rules.
		② Bending test	1	No.1			To be free of harmful defects
		③ Impact test	3sets	No.3~4			see NOTES 6.
	Weld zone	④ Tensile test	2	No.1			Measured tensile strength is to exceed that of the base metal.
		⑤ Bending test	2	No.2			To be free of harmful defects
		⑥ Impact test	3sets	No.3~4			see NOTES 6.
		⑦ Micro-test	2	No.5			Coarse grain area in HAZ and degree of heat treatment are to be examined.
		⑧ Macro test	1	No.5			To be free of harmful defects
		⑨ Sulphur print	1	No.7			To be free of harmful defects
		⑩ Hardness test	3	No.5			For reference only. However, hardness is to be max 330 for Grade R4S, and 340 for Grade R5.
		⑪ CTOD test	6 (from 3 links on each weld side and non-weld side)	No.5			To be comply with CTOD minimum values of Notes 7
Test of testing object of chains		⑫ Proof test	2 lengths	No.1~5 No.9~13		⑫, ⑬, ⑮, ⑯ : To conform to **Pt 4, Ch 8** of the Rules. ⑭ : After proof test, chain length and dimensions of each link are to be measu	To conform to **Pt 4, Ch 8** of the Rules.
		⑬ Breaking test	2 lengths	No.15~19 No.30~34			Actual breaking load is to be measured in addition to conform to **Pt 4, Ch 8** of the Rules.
		⑭ Dimension test	2 lengths	No.1~5 No.9~13			Check dimensional changes in addition to conform to **Pt 4, Ch 8** of the Rules.
		⑮ Mass inspection	2 lengths	No.1~5 No.9~13			To conform to **Pt 4, Ch 8** of the Rules.
		⑯ Visual inspection	2 lengths	No.1~5 No.9~13			To conform to **Pt 4, Ch 8** of the Rules.

NOTES;

1. The test links used in the aproval test are to, in principle, be of the desired largest diameter for approval.
2. In the case of cast links, their mechanical properties tests are to be carried out in a manner corresponding to those applied to weld zone. Of those items of test on the testing object, the bending test and compression test may be substituted by magnetic particle testing.
3. When deemed necessary by the Society, non-destructive testing may be requested.
4. In the case of the approval test in association with the change in the manufacturing process as shown in **1203. 5,** the diameter and number of test link, or the approval test items may be reduced.
5. When steel materials, manufacturing process or heat treatment methods which are not specified in the Rules are to be employed, the Society may request other tests or submission of reference materials in addition to the specified test items.

Table 2.10.3 Approval Test Items and Acceptance Criteria for Offshore Chains(continue)

Test chains for approval test

6. Temperatures of impact test are to be in accordance with following tables.

Kind of chain	Temperature	Minimum absorbed average energy (J)	
		Base metal	Flash butt weld zone
Grade R3 chain	0°C, -20°C and -40°C	At 0°C to be of 60J, At -20°C to be of 40J, At -40°C to be with reference.	At 0°C to be of 50J, At -20°C to be of 30J, At -40°C to be with reference.
Grade R3S chain		At 0°C to be of 65J, At -20°C to be of 45J, At -40°C to be with reference.	At 0°C to be of 53J, At -20°C to be of 33J, At -40°C to be with reference.
Grade R4 chain		At -20°C to be of 50J, At other temperature to be with reference.	At -20°C to be of 36J, At other temperature to be with reference.
Grade R4S chain		At -20°C to be of 56J, At other temperature to be with reference.	At -20°C to be of 40J, At other temperature to be with reference.
Grade R5 chain		At -20°C to be of 58J, At other temperature to be with reference.	At -20°C to be of 42J, At other temperature to be with reference.

7. CTOD test required for offshore mooring chain is to comply with the followings *(2017)*
For initial approval, CTOD tests are to be tested in accordance with a recognized standard such as **BS 7448 Part 1** & **BS EN ISO 15653:2010**. The CTOD test piece is to be a standard 2 × 1 single edge notched bend piece, test location as shown in **Figure 1**. The notch of the CTOD specimen is to be located as close to the surface as practicable. The minimum cross section of the test piece is to be 50 × 25 mm for chain diameters less than 120 mm, and 80 × 40 mm for diameters 120 mm and above. CTOD specimens are to be taken from both the side of the link containing the weld and from the opposite side. Three links are to be selected for testing, a total of six CTOD specimens. The tests are to be taken at minus 20 ℃ and the lowest CTOD of each set of 3 specimens is to be met the minimum values indicated below in table :

Chain type	R3 (mm)		R3S (mm)		R4 (mm)		R4S & R5 (mm)	
	BM	WM	BM	WM	BM	WM	BM	WM
Stud link	0.20	0.10	0.22	0.11	0.24	0.12	0.26	0.13
Studless	0.20	0.14	0.22	0.15	0.24	0.16	0.26	0.17

BM : Base metal
WM : Weld metal

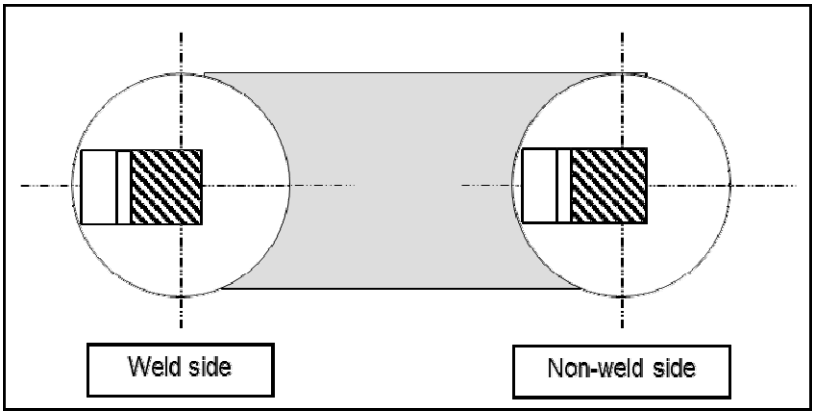

8. For R4S and R5 chain, prior to approval, the manufacturer is to have undertaken experimental tests or have relevant supporting data to develop the chain material. The tests and data may include fatigue tests, hot ductility tests (no internal flaws are to develop whilst bending in the link forming temperature range), welding parameter research, heat treatment study, strain age resistance, temper embrittlement study, stress corrosion cracking (SCC) data and hydrogen embrittlement (HE) study, using slow strain test pieces in hydrated environments. Reports indicating the results of experimental tests are to be submitted.

Table 2.10.4 Approval Test Items and Acceptance Criteria for Offshore Chains Accessories

Test item		Numbers of test specimens	Selection of test specimen and details of test specimen	Test procedure	Acceptance criteria
Mechanical properties test of chain accessories	① Tensile test	2	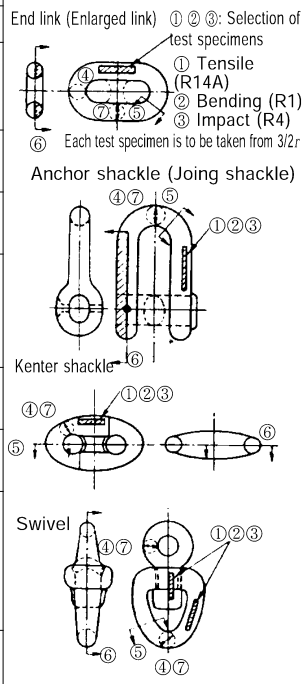	① and ② : To conform to **Pt 2, Ch 1** of the Rules, The bending radius of Grades R3, R3S & R4 chain accessories is to be 25mm. Grade R4S and R5 chains are to be as deemed appropriate by the Society. And the bending angle is to be not less than following angle : 30° for Grade R4, 45° for Grade R3S, 60°. And Grade R4S and R5 chains are to be as deemed appropriate by the Society. ③ : Testing temperature of impact test is to be refered to NOTES 6. ④ : To be examined at its surface, 2/3 r and center (magnifying power : × 100) ⑤ : Areas shown in the figure are to be macroetched. ⑥ : Sulphur print of the chain accessory in longitudinal section is to be taken. ⑦ : Hardness distribution in diametric direction is to be measured at proper intervals. ⑧ : To conform to **1025. 4** ⑨, ⑩, ⑫ : To conform to **Pt 4, Ch 8 Sec 4** of the Rules. ⑪ : Measurements of each part of chain accessories after subjected to proof test are to be taken for dimensions.	To conform to **Pt 2, Ch 1** of the Rules.
	② Bending test	2			To be free of harmful defects
	③ Impact test	see NOTES 6			see NOTES 6.
	④ Micro-test	3			The degree of heat treatment in diametric direction is to be examined.
	⑤ Macro test	1			To be free of harmful defects
	⑥ Sulphur print	1			To be free of harmful defects6.
	⑦ Hardness test	1			For reference only. However, hardness is to be max 330 for Grade R4S, and 340 for Grade R5.
	⑧ CTOD test	3			To be as deemed appropriate by the Society.
Tests on testing object of chain accessories	⑨ Proof test	1			To conform to **Pt 4, Ch 8** of the Rules.
	⑩ Breaking test	1			1.1 times of the specified breaking load is omly required to be loaded, and no actual breaking is required.
	⑪ Dimension inspection	1			To conform to **Pt 4, Ch 8** of the Rules. In addition, dimensional changes are to be measured.
	⑫ Visual inspection	1			To conform to **Pt 4, Ch 8** of the Rules.

NOTES;

1. The test chain accessories used for approval test are to, in principle, be two or three, in number, of the larges diameter under application.
2. The Society, when deemed necessary, may request nondestructive test.
3. In the case of the approval test required in connection with the change in the manufacturing process as shown in **1025. 7**, the Society may reduce the requirements in the diamter and number of test chain accessories with respect to the test itmes.
4. When any steel materials, manufacturing process or haat treatment not specified in the Rules are intended to be used, the Society may request other testing procedure or submission of reference data in addition to those specified in the Rules.
5. Two specimens for each test of tensile test specimens, bending test specimens and Charpy V-notch impact test specimens are to be taken from the test samples specified in Pt 2, Ch 1, 502. & 603. of the Rules, on both cast and forged chain accessories, tested to satisfy the specified values in addition to the mechanical properties tests given in this Table.
6. Temperature of impact test are to be in accordance with following tables.

Kind of chain accessories	Number of test specimen	Temperature	Minimum absorbed average energy (J)
Grade R3 chain accessories	3 set	0°C, -20°C and -40°C	At 0°C to be of 60J, At -20°C to be of 40J, At -40°C to be with reference
Grade R3S chain accessories	3 set		At 0°C to be of 65J, At -20°C to be of 45J, At -40°C to be with reference
Grade R4 chain accessories	3 set		At -20°C to be of 50J, At other temperature to be with reference
Grade R4S chain accessories	3 set		At -20°C to be of 56J, At other temperature to be with reference
Grade R5 chain accessories	3 set		At -20°C to be of 58J, At other temperature to be with reference

7. For R4S and R5 chain accessories, prior to approval, the manufacturer is to have undertaken experimental tests or have relevant supporting data to develop the chain accessory material. The tests and data may include fatigue tests, hot ductility tests (no internal flaws are to develop whilst bending in the link forming temperature range), welding parameter research, heat treatment study, strain age resistance, temper embrittlement study, stress corrosion cracking (SCC) data and hydrogen embrittlement (HE) study, using slow strain test pieces in hydrated environments. Reports indicating the results of experimental tests are to be submitted.

Section 11 Wire Rope

1101. Application

The requirements in this section apply to the tests and inspection for the approval of manufacturing process of wire rope as specified in **Pt 4, Ch 8, 503.** of the Rules.

1102. Approval tests

1. Selection of test samples

(1) For strand test, a suitable length of a strand is to be cut off the rope and unstranded. The number of wires to be taken therefrom for tests is to be as specified in **Table 4.8.12.** of **Pt 4, Ch 8** of the Rule.

(2) For rope test, one test piece is to be taken suitable length from end of each length of steel wire ropes.

2. Approval tests and acceptance criteria

(1) The approval test is to be carried out on each grade of steel wire ropes under application for each manufacturing factory. The details of approval test are to be as indicated in **Table 2.11.1** and the test is to be carried out in the presence of the Surveyor. Provided, however, approval test is carried out in the presence of inspector of the organization authorized by the Society (officially recognized establishment), the test witnessed by the Surveyor of the Society may be omitted.

(2) Notwithstanding the requirements in the preceding (**1**), the test may be done by sampling subject to the Society's approval.

(3) Where it is difficult to comply with the test method and evaluation criteria specified in the preceding (1), the decision may apply to standards (**KS D3514** "Wire Rope") authorized by the Society (officially recognized establishment).

Table 2.11.1 Approval Test Items and Acceptance Criteria for wire ropes

Kinds	Test item	Test method	Acceptance criteria
strand test	Diameters and Appearance	(1) The difference between the maximum and minimum diameters of the individual wires is to be measured at any two or more positions by the micro meter (2) Through the entire length, cross section of individual wires is to be rounded with smooth surface. Individual wires should also be free from defects such as scratch which is detrimental to practical use.	To comply with the **Pt 4, Ch 8** of the Rule.
	Breaking tests(1)	(1) The test piece is to be set to the testing machine and gradually pulled until break down. The difference between individual breaking load and average value is to be calculated. (2) The distance between grips is to be 100 mm where the diameter of test piece is less than 1.0 mm, or 200 mm where the diameter of test piece is 1.0 mm and over	The difference between individual breaking load and average value is to be within ± 8 %
	Twisting Tests(1)	The test piece with the length 100 times the diameter of the test piece is to be gripped hard at the ends, and then, depending on the twisting speed of each strand, one end is to be revolved until the test piece is broken down. Where they are broken down, the number of times of twisting is to be measured.	To comply with the **Pt 4, Ch 8** of the Rule.
	Wrapping Tests	The test pieces are to be wrapped at least eight times around the wire with the same diameter as the test piece. Where they are unwrapped, the number of broken test pieces is to be measured.	
	Mass of Zinc Coating	To be as deemed appropriate by the Society	To be as deemed appropriate by the Society
rope test	Diameters and Appearance	(1) The diameter of steel wire ropes is taken as an average diameter measured at any two or more positions except within 1.5 m from the ends of ropes. (2) Through the entire length, wire ropes should be free from defects such as dent, scratch which are detrimental to practical use.	To comply with the **Pt 4, Ch 8** of the Rule.
	Breaking tests(1)	(1) The test piece of which both ends are either loosened and solidified to cone with suitable metal alloy or gripped by other suitable methods, is to be set to the testing machine and gradually pulled until breaks down. (2) One test piece is to be taken from each length of steel wire ropes. (3) The distance between the grips is to be set according to the diameter of ropes. However, it needs not exceed 2 m.	To comply with the **Pt 4, Ch 8** of the Rule.

Notes
(1) Where the test piece has broken down at the parts of the grips before reaching the required breaking load, one more test piece taken from the steel wire rope may be retested.

Section 12 Synthetic Fibre Ropes

1201. Application

1. The requirements in this Section apply to the tests and inspection for the approval of manufacturing process of synthetic fibre ropes specified in **Pt 4, Ch 8, 603.** of the Rules.
2. Where it is difficult to comply with test methods and evaluation criteria specified in this Section, the decision may apply to standards authorized by the Society. (officially recognized establishment)

1202. Data to be submitted

The Society may request to submit the data about following tests for raw textiles for synthetic fibre ropes:
(1) Linear strength and elongation tests
(2) Chemical resistance test

1203. Approval tests

1. Selection of test samples

Test pieces are to be taken suitable length from end of each length of synthetic fibre ropes. The number of rope to be taken for tests is to be as specified in **Table 2.12.1.**

2. Approval tests and acceptance criteria

(1) The approval test is to be carried out on each kind of ropes under application for each manufacturing factory. The details of approval test are to be as indicated in **Table 2.12.1** and the test is to be carried out in the presence of the Surveyor. Provided, however, approval test is carried out in the presence of inspector of the organization authorized by the Society (officially recognized establishment), the test witnessed by the Surveyor of the Society may be omitted.

Table 2.12.1 Approval Test Items and Acceptance Criteria for synthetic fibre ropes

<table>
<tr><th>Test item</th><th>Test method</th><th>Acceptance criteria</th></tr>
<tr><td>Construction & Diameter</td><td>Construction and diameter of synthetic fibre ropes are to be measured in accordance with Pt 4, Ch 8, Sec 6 of the Rule.</td><td>To comply with the Pt 4, Ch 8, Sec 6 of the Rule.</td></tr>
<tr><td>Tensile tests in wet and dry conditions</td><td>(1) Tensile tests on three each test specimens are to, in principle, be carried out for each of the test conditions given in Table below and breaking strength and elongation are to be measured. For rope having diameter higher than 60mm, one additional tensile test specimen is to be taken from the rope of maximum diameter.
(2) The gauge length of the test specimen is to be 30 times or more of the rope diameter, however it needs not to exceed 1 meter.
<table>
<tr><th>Kind of rope / Diameter of test rope</th><th>Vinylon rope
polyester rope
nylon rope</th><th>Polyethylene rope
polypropylene rope</th></tr>
<tr><td rowspan="2">12 ~ 24 mm</td><td>Wet condition(1)</td><td>Wet condition(3)</td></tr>
<tr><td>Dry condition(2)</td><td>Dry condition(2)</td></tr>
<tr><td rowspan="2">40 ~ 60 mm</td><td>Wet condition(1)</td><td>Wet condition(3)</td></tr>
<tr><td>Dry condition(2)</td><td>Dry condition(2)</td></tr>
</table>
NOTES:
(1) The test specimen is to be soaked in water at normal temperature for a period of 30 minutes or more, then taken out and subjected to tensile test at room temperature.
(2) The test specimen in dry condition is to be subjected to tensile test at room temperature.
(3) The test specimen is to be soaked in warm water at temperature of 35 ± 2°C for a period of 30 minutes or more, then taken out and immediately subjected to tensile test at room temperature.</td><td>(1) Except on cases with vinylon and nylon in wet condition, respective breaking loads are to satisfy the requirements specified in Pt 4, Ch 8, Sec 6, of the Rules.
(2) The breaking loads of vinylon and nylon in wet conditions are to be 80 % or more and 90 % or more respectively of the values specified in above (1)
(3) Values with respect to elongation are to be for reference only.</td></tr>
</table>

Table 2.12.1 Approval Test Items and Acceptance Criteria for synthetic fibre ropes (continued)

<table>
<tr><th>Test item</th><th>Test method</th><th>Acceptance criteria</th></tr>
<tr><td>Abrasion resistance tensile test</td><td>(1) A total of six test specimens are to be taken from ropes with diameter from 12 to 24 mm. Three of them are to be set in the abrasion resistance testing machine with the following particulars, and are to be subjected to repeated strokes for 500 times.
• Stroke: 200~300 mm
• Abrasion speed: 50 strokes/min.
• Abrasion surface: Grinder with particle size No. 120
• Tensile load : 98 N
(2) Those three tested specimens together with other three non-tested specimens are to be placed in a thermostatic oven kept at a temperature of 20 °C and a humidity of 65 %, and left there for one hour.
(3) They are then to be taken out, and be subjected to tensile tests for measuring the tensile strength and elongation, whereby the strength values of the rope before and after abrasion are to be compared.
(4) For other test conditions than those shown above, they are to be considered appropriate by the Society.</td><td>The ratio of the residual abrasion strength to the strength without abrasion (the residual abrasion strength ratio) is to satisfy the values given in table below.
<table>
<tr><th>Kind of rope</th><th>Residual abrasion strength ratio (%)</th></tr>
<tr><td>Vinylon rope</td><td>min. 50</td></tr>
<tr><td>Polyethylene rope</td><td>min. 55</td></tr>
<tr><td>Polyester rope</td><td>min. 55</td></tr>
<tr><td>Polypropylene rope</td><td>min. 55</td></tr>
<tr><td>Nylon rope</td><td>min. 55</td></tr>
</table></td></tr>
<tr><td>Weather resistance test</td><td>(1) A total of six test specimens are to be taken from ropes with diameter from 12 to 24 mm. Three of these test specimens are to be placed in the weather resistance test machine controlled to the following conditions where they are to be left for 200 hours or more.
• Weathering light : Sunshine carbon arc light or ultraviolet carbon arc light (**KS F 2274** (Recommended Practice for Accelerated Artificial Exposure of Plastics Building Materials))
• Temperature of black panel : 63 ± 1 °C
• Period of water spray : 18 min/2 hours
(2) The six test specimens including those three non tested specimens are then to be placed in a thermostatic oven kept at a temperature of 20 °C and a humidity of 65 %, and left there for one hour. These test specimens are to be taken out, tensile strength and elongation are to be measured, and the strength after the weathering resistance test and that of the test specimens not subjected to such weathering resistance test are to be compared.</td><td>The ratio of the former to the latter (the residual weathering strength ratio) is to satisfy the values given in table below.
<table>
<tr><th>Kind of rope</th><th>Residual weathering strength ratio (%)</th></tr>
<tr><td>Vinylon rope</td><td>min. 90</td></tr>
<tr><td>Polyethylene rope</td><td>min. 80</td></tr>
<tr><td>Polyester rope</td><td>min. 90</td></tr>
<tr><td>Polypropylene rope</td><td>min. 80</td></tr>
<tr><td>Nylon rope</td><td>min. 80</td></tr>
</table></td></tr>
</table>

(2) The procedures of the test for raw textiles for synthetic fibre ropes refer to the **Table 2.12.2**

Table 2.12.2 Approval Test Items and Acceptance Criteria for raw textiles for synthetic fibre ropes

<table>
<tr><th>Test item</th><th>Test method</th><th>Acceptance criteria</th></tr>
<tr><td>Linear strength and elongation tests</td><td>(1) The test procedures of filament and split are to be in accordance with **KS K 0412**, and those of span are to be correspondingly on accordance with **KS K 0475** (Testing Method for Tensile Strength of Spun Yarns).
(2) The number of test specimens used in the test is to be 10 and average value of the linear strength and elongation on these test specimens are to be obtained.</td><td>The average value of linear strength and elongation obtained are to comply with the requirements given in **Table 2.12.3.**</td></tr>
<tr><td>Chemical resistance test</td><td>(1) The chemical resistance tests are to comprise alkali-resistance test and acid-resistance test.
(2) In alkali-resistance test, the test specimen is to be socked in 10% caustic soda solution at a temperature 20±2°C for a period of 24 hours, whereas in acid-resistance test, the test specimen is to be socked in 10% acid solution at a temperature 20±2°C for a period of 24 hours, and then rinsed with water, and the linear strength is to be measured by the same method as in (1) above.
(3) The number of test specimens are to be 10 for each chemical solution. The linear strength is to be converted into the value of residual strength ratio of chemical resistance by following equation.
$$\text{Residual chemical resistance strength ratio} = \frac{\text{linear strength(g) after chemical processing}}{\text{linear strength(g) before chemical processing}} \times 100(\%)$$</td><td>These average values are to satisfy the values given in **Table 2.12.3.**</td></tr>
</table>

Table 2.12.3 Standard Tensile Strength Values for Raw Textiles

Kind of raw textiles			Mechanical properties		Residual chemical resistance strength ratio(%)	
			Linear strength(g/D)	Linear elongation (%)	10% sulphuric acid	10% caustic soda
Vinylon	for Grade 1	Span, mono-filament	4.0 min.	9 ~ 18	90 min.	90 min.
	for Grade 2	Multi-filament	6.0 min.	9 ~ 18	90 min.	90 min.
Polyethylene	for Grade 1	Mono-filament	6.5 min.	5 ~ 25	90 min.	90 min.
	for Grade 2	Mono-filament	8.5 min.	5 ~ 15	95 min.	95 min.
Polyester		Multi-filament	5.5 min.	10 ~ 20	90 min.	90 min.
Polypropylene	for Grade 1	Span	4.5 min.	10 ~ 20	90 min.	90 min.
		Mono-filament	6.0 min.	10 ~ 20	90 min.	90 min.
	for Grade 2	Multi-filament	6.5 min.	15 ~ 25	90 min.	90 min.
		Special mono-filament	6.0 min.	5 ~ 15	90 min.	90 min.
		Special multi-filament	5.5 min.	5 ~ 15	90 min.	90 min.
		Split	4.0 min.	5 ~ 15	90 min.	90 min.
Nylon		Multi-filament	6.5 min.	15 ~ 30	80 min.	80 min.

NOTE:
g/D signifies gram/denier

1204. Yarn test

In case where manufacturer's testing equipment does not have enough capacity for tensile test of fibre rope, yarn test may be substitute for tensile test specified in **Table 2.12.1** provided that yarn test specimens are to be taken from fibre rope strand in question and, for calculating the breaking load, realization factor authorized by the Society shall be multiplied to the average yarn test value.

Section 13 FRP Ships

1301. Application

The requirements in this Section apply to tests and inspection for the approval of manufacturing process of Fibreglass Reinforced Plastic Ships (hereinafter referred to as **FRP ships**) as specified in "Rules for Classification of Fibreglass Reinforced Plastics Ships" and "Rules and Guidance for the Classification of High Speed and Light Crafts".

1302. Data to be submitted

The following data are to be submitted to the Society in addition to those specified in **102.**

(1) Data described manufacturer's name and product name for polyester resins, fibreglass reinforcing materials, core materials for sandwich construction, etc.

(2) Test methods and test records of the FRP test specimens cut from FRP which are of the same laminate composition and moulded by the same procedure and at the same workshop as the actual hull laminates (including tensile strength, tensile modulus, flexural strength, flexural modulus, barcol hardness, glass content, specific gravity, etc., and test report of shearing strength in case of sandwich construction)

1303. Workshops

The workshops manufacturing FRP ships intended to be registered to the Society, are to comply with the requirements in **Table 2.13.1** to maintain sufficient mechanical properties and a good quality of moulding.

Table 2.13.1 Facility standard for FRP ship manufacturing workshop

Facility	Equipment	Facility standard
General		(1) The laminating shops are to be of such construction as to be free from penetration of draught, dust and moisture, and to be provided with heating system to keep to keep the temperature above 15 °C. In this case, the method partially beaming the infrared rays is not to be generally permitted. (Recommended air temperature and humidity are 18°C to 22 °C and 60 % to 70 % respectively) (2) The shops are to be designed so that resin and fibreglass are not to be deteriorated with the elapse of the time and the fibreglass reinforcements are not to be contaminated by soil, dust, moisture, etc. (3) The standard specification for the construction and repair of FRP ships shall be clearly established and moulding of FRP is to be carried out under the supervision of a well-experienced technical expert.
Standard of facilities		The manufacturer of FRP ships is to provide with the facilities which can manufacture the FRP ships about G/T 20 tons by hand lay-up.
Laminating shops	Area	The laminating shops are to have sufficient spaces to carry out the laminating works and mould releasing operation for the largest ships intended to be manufactured.
	Structural conditions	The structure of the laminating shops is to be of an steel frame or an steel-concrete. The ceiling and surrounding walls are to be of a fireproof structure and to be protected against moisture, rain and draught, and the ground is to be of concrete construction. For the purpose of sun lighting, the partial use of inflammable materials for the ceiling may be allowed. A sufficient spaces carrying out the outfitting works are to be arranged not to cause inconvenience in doing their works, or their works are to be carried out in the separated room.

Table 2.13.1 Facility standard for FRP ship manufacturing workshop (continued)

Facility	Equipment	Facility standard
Facilities in laminating shops	Temperature conditioners	The laminating shops are to have temperature conditioners not to fall below 15°C in winter season and rise above 30 °C in summer season at one metre distance from the floor level.
	Ventilation systems	Ventilation systems in accordance with the relevant law are to be provided to exhaust styrene gases and other harmful gases.
	dust collectors	The suitable dust collectors are to be provided in order to exhaust dusts yielded during laminating operation.
	Lighting and shields	Lighting equipment are to be so arranged that the operation of laminating are not disturbed. Also, the skylights and windows of the laminating shops are to be provided with suitable means of shielding so that the laminates are not exposed to direct sunlight.
	Transportation	Transportation equipment of suitable capacity are to be provided and arranged.
	Fire fighting and detection systems	Fire fighting and detection systems are to be provided in accordance with the relevant law. The caution sign of "Flammables" is to be indicated in shops. The smoking room is to be arranged outside the laminating shops.
	Electric equipment	Electrical equipment in the laminating shops is to be of explosion-protected electrical appliance, except that the ventilation systems are provided completely.
	Glass cutting	The glass cutting tables are to be so arranged as to be properly subdivided or separated from the laminating shops.
	Resin mixing	The mixing equipment and the weighing machines are to be provided in any case. Where the resin mixing room is provided, it is to be of a fireproof construction.
	Cleaning	The separated room with the ventilator is to be provided so as to clean the laminating equipment and FRP components weighing machines.
Other facilities of the laminating shops	Storage	A catalyst, resin, solvent, etc., are to be stored in cool and dark spaces in accordance with the relevant law, and the fibreglass reinforcements and core materials are to be stored in dust-free and dry spaces.
	Sanitary	A washstand, a bathroom, necessary medicine for eye-washing, etc., are to be provided considering the number of workers.
	Storage for moulds	Moulds used repeatly are to be stored free from rain and wind, and they are to be properly kept so that the internal surface of moulds can not be contaminated and distorted.
	Air compressor	The air compressors of suitable capacity with an air cleaner are to be provided outside the laminating shops.
	Management of waste matter	The incinerators for waste matters are to be equipped and the waste matters are to be treated considering a fire and environmental pollution. Where the incinerator is not provided, the waste matters are to be requested to the speciality dealers concerned of industrial waste products. Also, the procedure of management for ashes incinerated and incombustibles is to be established in accordance with the relevant law.

1304. Approval tests

1. Approval test is to be carried out for FRP(including FRP laminates and sandwich laminates) used for hull construction of FRP ships.

2. Construction of FRP test sample and approval test are to be conducted in accordance with the requirements in **Ch 3, 301.** and **302.** of the Rules for Classification of Fibreglass Reinforced Plastics Ships.

3. Tests specified in the preceding **2** are to be carried out in the presence of the Society's Surveyor. Where tests are carried out by a recognized inspecting agency, it may be omitted at the discretion of the Society.

Section 14 Boiler and Pressure Vessel

1401. Application

The requirements in this Section applies to the manufacturers which have the activity categories such as the manufacturing process, or manufacturing process and design, or manufacturing process, design and test of the welding type of the Boilers and Class Ⅰ & Ⅱ Pressure Vessels prescribed in **Pt 5, Ch 5, 401. 1** of the Rules.

1402. Documents to be submitted

The following reference data in addition to those specified in **102.** are to be submitted to the Society. (if any)

(1) Kind of product and activity categories
(2) Types(models) of pressure vessels and/or boilers being produced(including design pressure, max. dimension or capacity)
(3) In case of an application for boilers and/or class Ⅰ pressure vessels, design drawings of boiler and/or class Ⅰ pressure vessel having the max dimension or the max. condition. (if the drawings are already approved by the Society, the submission of drawings may be waived appropriately.)
(4) Manufacturing flow chart indicating all of the production processes and relative testing & inspection points
(5) Reference to written procedures for testing and inspection (Procedures need not be submitted, but must be available for review at the manufacturer's works upon request.)
(6) A list and description of equipment used for mechanical testing, pressure testing, non-destructive testing and production & machining facilities
  (a) Equipment for material preparation and forming, cutting machines, bending rollers, bending presses, machining equipment, adjustment and position equipment
  (b) Equipment for surface treatment and processing
  (c) Equipment for preheating
  (d) Equipment for welding, welding processes used
  (e) Equipment for heat treatment, including type of furnace, size, temperature range, temperature control and recording
  (f) Equipment for hydraulic pressure testing
(7) Qualification of personnel engaged in testing and inspection
(8) Details for welding
  (a) WPS for all types of materials and thickness ranges for which approval is sought
  (b) Relevant PQR, quality requirements for welding operator, list of certified welders with qualification range, welding method, position and material type

1403. Approval test

1. Approval tests are to be carried out with the representative boiler or class 1 pressure vessel in production in the presence of the Surveyor. However, class 2 pressure vessel may be used if the manufacturer has the capability of producing class 2 pressure vessels only.

2. Approval tests listed below should at least be carried out to confirm that applied type of products are in compliance with the requirements of **Pt 5, Ch 5** of the Rules for Classification, Steel Ships.

(1) Review of documentation from manufacturer and verification of the procedures(requirements for identification and traceability of the products, materials and welding details)
(2) Non-destructive testing, in compliance with agreed procedures and Rule requirements
(3) Hydraulic test in compliance with Rule requirements
(4) Production weld tests according to **Pt 5, Ch 5, 405.**

1404. After approval

After obtaining the approval, witnessing of welding workmanship approval test may be waived at the discretion of the Surveyor. ⚓

CHAPTER 3 TYPE APPROVAL

Section 1 General

101. General

1. Application

The requirements in this Chapter apply to the procedures and tests for type approval of materials and equipment for which approval of the Society is to be obtained in advance before they are used in ships in accordance with the requirements in the Technical Rules of the Society. However, the materials and equipment, other than those specified in the Technical Rules may be approved upon request of the manufacturer. In this case, the requirements in this Chapter are correspondingly applied.

2. The manufacturers wishing to obtain the type approval are to comply with the requirements specified in the relevant Section of this Chapter according to the kind of materials and equipment in addition to the requirement for the procedures and tests specified in this Section.

3 Definition

(1) **Mass production method** means to be produced by either lot production method or quasi-lot production method defined in the followings.
(2) **Lot production method** means a production method in which the parts are produced in a batch as a unit and the batch is manufactured repeatedly.
(3) **Quasi-lot production method** means a production method in which the parts are produced in a batch as a unit whereas the machinery is produced as a unit.

102. Approval application

1. The applicant

The applicant is, in principle, to be the manufacturer of the materials and equipment. However, the applicant, where deemed appropriate by the Society, need not always be the manufacturer of the materials and equipment.

2. The manufacturer wishing to obtain a type approval is to submit a copy of the application of type approval (refer to **Annex 6**) of the Society, together with three copies of the required data for approval and two copies of the required data for reference, to the Society. However, the required data previously submitted to the Society, according to the Technical Rules, may be exempted from submission.

3. Data to be submitted

(1) Data for approval
(A) Type test program and applicable standards, codes or rules (when the test methods, procedures, etc. in the Guidance, IMO Resolution, Korean Industrial Standards, etc. apply, their number and subject stipulation instead of submission may be accepted except details of test specimens.)
(B) Relevant drawings (fully detailed sectional assembly, drawings for main component parts) and documents as belows.
(a) Product specifications
(b) All product details, catalogues, data sheets, calculations and functional descriptions, parts list, etc,(if any)
(c) Application and operational limitation
(d) Drawings showing the interaction between the main component(if any)
(e) PCB(Printed Circuit Board) Lay-out/circuit diagram(if any)
(f) Wiring diagram, connection diagram(if any)
(g) System block diagram(control logic)(if any)
(h) Name and version No of software to be installed and Quality Assurance Plan(if any)
(i) Installation and operation manual(if necessary)
(j) marking methods

(2) Data for reference
(A) Particulars and specifications of products
(B) Outline of company
(a) Data on history, outline and layout of manufacturing plants
(b) Organisation and management structure, including subsidiaries to be included in the approval/certification
(C) When plant audit is required in accordance with the requirements in **105.**, the following reference data may be submitted.
(a) Data on major manufacturing facilities
(b) Data on manufacturing process
(c) Data of in-house standards or codes
(d) Data of quality control system
(e) Data on major inspection and testing facilities
(f) Service records
(g) List of subcontractors and their products
(h) For a newly developed product, documents related to tests and their results for its development
(i) If applicable, written procedures or documents for verifying that materials are asbestos free(asbestos-free declarations, etc.) *(2017)*

4. Notwithstanding the requirements in the preceding **Par 2**, where the applicant is already approved by the Society and the attachments are entirely equal in content to the documents previously submitted the submission of documents may be partly or wholly exempted except for the approval test program.

103. Document review

The Society examines the type test program, drawings and data and where deemed appropriate, those are to be approved and returned to the manufacturers.

104. Type test

1. After completion of the document reviews (if necessary, including plant audit specified in **105.**), the type tests are to be carried out for the optionally chosen test specimens in the presence of the Surveyor in accordance with the approved type test program and test method described in each Section of the Guidance or equivalent method thereof.

2. Products which have been failed to pass the type tests specified in **1.** shall not be retested without revision of drawings and/or specifications. If, following analysis of the experimental data from tests, it is found that the failure of type tests have been caused by the poor test conditions, etc., retest without revision may be permitted subject to the Society's approval.

3. In principle, the type tests are to be carried out at the manufacturing sites. However, the test may be done outside of manufacturing sites subject to the Society's approval.

4. The type tests may be partly or wholly omitted, subject to the approval by the Society, in cases where the manufacturer has been approved by other Classification Society or an inspection organization recognized by the Society.

5. Test records

After completion of the type tests, the manufacturer is to submit three copies of the test records to the Society.

105. Plant audit

The Society may request the plant audit specified in **Ch 2, 104**. to assure the manufacturing process (including that of subcontractor's works) and quality assurance of the products.

106. Notification and announcement of approval

1. The Society is to issue a Type Approval Certificate, such as **FORM AC-2** shown in **Annex 2,** to the applicant, where deemed appropriate by the Society on the basis of the plant audit report and the submitted test reports after completion of the type test.
2. The Certificate shall clearly state that the type and scope of products and any limitations or restrictions imposed.
3. Where real ship tests are required, the Society is to issue a Provisional Type Approval Certificate to the applicant, where deemed appropriate by the Society on the basis of the submitted test reports after completion of the type test except the real ship tests.
4. The Society is to issue a Type Approval Certificate, such as **FORM AC-2** shown in **Annex 2,** to the applicant, where deemed appropriate by the Society on the basis of the submitted test reports after completion of the real ship tests.
5. The Society announces the manufacturers who have been granted the type approval in the "List of Approved Manufacturer & Type Approved Equipment" including approval conditions.

107. Changes in the approved contents

1. When the alteration to the specifications (materials, composition, dimension, construction, particulars, etc.), manufacturing facilities, manufacturing methods and/or quality control system has a significant effect on the property or quality of the products, or when the works was removed, the manufacturer is to submit the application of alteration to the Society together with the detailed documents of the alteration (where practicable, to be mentioned with a comparison table form between new and old). The Society may request an occasional plant audit or confirmation test, where deemed necessary upon reviewing the contents of alteration.
2. For the insignificant alterations, the manufacturer shall give the contents of alteration to the Surveyor for confirmation at the appropriate time. In this case the Surveyor shall report the contents of alteration to the head office.
3. When the manufacturing sites (including that of subcontractor's works) were changed or added, the manufacturer is to submit the application for alteration to the Society together with the detailed documents of the alteration. The Society is to carry out the plant audit equivalent to **Ch 2, 104.** and to reissue 'Type Approval Certificate' in which the alteration is noted.

108. Validity and renewal of approval certificate

1. Validity of approval certificate

(1) The type approval certificate will be valid within five years from the date of issue. In case where the approval certificate is renewed in accordance with the requirements specified in the preceding **107.,** the expiration date will not be changed.

(2) Where the Society issued a provisional type approval certificate, the validity of the type approval certificate described in **106. 3** above will be residual period within five years from issued date of provisional type approval certificate.

2. Renewal of approval certificate

(1) The Society may reissue type approval of a product without retesting, provided that no alteration of components or construction has been made to the product. However, the Fire protection materials are to be in accordance with the provisions in **Ch 3, 2603**. The manufacturer who intends to have a continuation of the approval is to submit an application to the Society three months before the due date together with the following data.

(A) Data related to the corrective action for approved product, if any

(B) Alteration to the approved manufacturing process or specification

(C) Service records of approved products or similar products which are approved by this Society (minimum 6 months and over)

(2) The Society may request an approval test and/or plant audit, where deemed necessary, after the examination of application and documents thereof.

3. Extension of approval certificate

(1) At the request of the manufacturer, the Society may extend the validity of approval certificate within the period of three months after expiry of the validity. In this case, the renewed approval certificate will be valid within five years from the expiry date of old approval certificate.

(2) At the request of the manufacturer, the Society may extend the validity of Provisional Type Approval Certificate for one time only, in case where the manufacturer submit the data including reasons of not completing the real ship test required and details of real ship test schedule, etc. However the extension can be made within two years from the expiry date of Provisional Type Approval Certificate.

109. Confirmation test and/or occasional plant audit

1. The confirmation test and/or occasional plant audit may be required when serious shortcoming is found in structure or performance, etc. of the materials and equipment already approved.

2. After completion of the confirmation test and/or occasional plant audit, the manufacturer is to prepare a record of the confirmation test and/or occasional plant audit and submit three copies to the Society upon receiving confirmation by the Surveyor.

110. Suspension or withdrawal of approval

1. The Society can withdraw the type approval in case any of the following cases.

(1) When the materials and equipment no longer confirm to the given requirements due to amendments or establishment of conventions, laws, rules and regulations.

(2) When serious shortcoming is found in structure or quality of the materials and equipment already approved after being installed in ships.

(3) When the products are produced in breach of the approval conditions or when the test results have been improperly reported.

(4) Changes brought by the Manufacturer without preliminary agreement of the Society to the extent of the approval defined at the time of the approval

(5) When the materials and equipment failed to pass the confirmation test and/or occasional plant audit specified in **109.**

(6) In case where a serious failure of the manufacturer's quality system has been identified or where the manufacturer has failed to inform any changes which will affect the approved quality system to this Society.

(7) In case where the manufacturer has not undergone a renewal plant audit or where the manufacturer is refusing to undergo occasional plant audit requested by this Society.

2. In renewal or occasional audit for approved products, where non-conformities in the approved quality system are found, or where conditions for the issuance of the certificate or for its maintenance have deteriorated, the manufacturer is to correct the non-conformities. Such corrections are to be verified by the Society. In case corrective actions are not taken within the specified period, the Society may suspend the approved certificate for a given period. In case the corrective actions are not taken for the suspended period, the Society may withdraw the approval.

3. Having no concern with the product quality the Society can withdraw, during the period of validity, the type approval in the following cases:

(1) When a request for withdrawal is made by the manufacturer.

(2) When the approval fees are not paid.

(3) When considered inappropriate for approved condition by the Society.

4. A manufacturer whose approval has been withdrawn, may apply for re-approval provided that the reasons which resulted in cancellation are corrected, and the Society is to issue the approval certificate after it is confirmed that the corrective action has effectively been implemented.

5. Where an application for re-approval is made for product which had its type approval withdrawn, such application shall be handled according to initial type approval requirements. But, it may be considered as exceptional case in case where the Society specially accepted.

111. Marking

The approved products are to be identified by a mark showing that they are the products approved by the Society.

112. Quality control

1. The manufacturing process and the quality control of the products are to be assured in accordance with the same procedure and system as they have been surveyed and examined by the Society under the manufacturer's responsibility.
2. The in-house test results for production are to be available for review whenever requested by the Society.

Section 2 Welding Materials

201. Application

The requirements in this Section apply to tests and inspection for the welding materials in accordance with the requirements in **Pt 2, Ch 2, 601.** of the Rules.

202. Data to be submitted

The following reference data are to be submitted to the Society in addition to those specified in **102.**

(1) The following data related to manufacturing process and quality control:
  (A) In the case of covered electrodes:
    (a) Kind of welding materials, data on manufacturing process
    (b) Data on type proportion of main component, shattering, mixing and churning of coating flux
    (c) Date on coating method, off-centering and drying methods
    (d) Data on final processing
  (B) In the case other than covered electrodes:
    (a) Data on chemical composition, manufacturing process, acceptance criteria, wire drawing method and rust protection of core wire
    (b) Data on main composition, manufacturing process, grain size distribution, etc. of flux
    (c) Data on manufacturer of welding wire, flux, etc.

(2) Data on storage method

(3) Data on packaging and marking

(4) Recent test records, or experiments and research data on welding materials for which approval is desired

(5) Data on the content of warning if they are provided against usage such as chemical composition of weldment, mechanical properties, welding current, welding voltage, welding speed, welding position, type of shielding gas, etc.

203. Type tests

Type tests are to be done in accordance with the requirements in **Pt 2, Ch 2, Sec 6** of the Rules.

204. Periodical inspection

1. General

The manufacturer of welding materials is to be subjected to the periodical inspection in the presence of Surveyor at each manufacturing plant within three months before or after the expiry of the validity.

2. Application for periodical inspection

Manufacturers are to submit to the Society an approval application from which includes for each brands of the welding materials (Marks of core wire in combination with flux for the case of automatic welding materials).

3. Items to be covered by periodical inspection

(1) The periodical inspections are to, in principle, be conducted at the manufacturing plant in the presence of the Surveyor.

(2) The test in periodical inspection is to be conducted in accordance with requirements of **Pt 2, Ch 2, Sec 6** of the Rules using the welding materials taken at random by the Surveyor.

(3) The periodical inspection is to be completed within the effective period of the approval certificate. However, for unavoidable circumstances, the periodical inspection may be completed within a period of three months after the expiration date upon the approval by the Society.

4. Test records

After completion of the test in periodical inspection the manufacturer is to prepare three copies of test records and submit them to the Society upon receiving confirmation by the attending Surveyor.

5. Withdrawal of approval

In case where periodical survey specified in 1 to 4 above has not been carried out, the Society may withdraw the approval.

205. Change in the approval content

1. Application for change

Application for change is to be treated in accordance with **Pt 2, Ch 2, 601. 6.**

2. Content of the tests

(1) Type tests and confirmation tests are to, in principle, be conducted at the manufacturing plant in the presence of the Surveyor.

(2) The additional type tests under the provision of **1** (1) afore-mentioned, are to be done in accordance with the following:

(A) Change of grade
The additional tests are to be done in accordance with the requirements of **Pt 2, Ch 2, 601. 3** (3) of the Rules.

(B) Addition of welding position
Tests, of which test assemblies are specified to be prepared for additional welding positions in the provisions of **Pt 2, Ch 2, 602.** through **608.** of the Rules, are to be done.

(C) Enlargement of maximum diameter of electrode or wire
Tests required are to be carried out at the largest diameter of electrode or wire in accordance with the requirements in **Pt 2, Ch 2, 602.** through **608.** of the Rules.

(D) Addition of shield gas
Additional tests are to be done in accordance with the requirements of **Pt 2, Ch 2, 603. 3, 604. 3, 606. 3** and **607. 3** of the Rules.

(E) Others
As deemed necessary, the tests required by the Society basing on the nature and extent of the change, are to be done.

(3) When confirmation test is required under the provision of **1** (2), the details of the confirmation test is to be informed by the Society taking consideration of the nature and extent of the changes.

3. Submission of test record and certificate of approval

(1) Type test record and confirmation test record are to be submitted in accordance with **104. 5** and **109. 2** respectively.

(2) In case when items described in the certificate of approval is changed, the manufacturer is to return the certificate to the Society.

206. Packing and marking

The manufacturers are to be specially noted the following points on the packing and marking of the approved welding materials.

(1) The approved welding materials are to be packed thoroughly to keep the quality during their transportation and storage.

(2) All boxes or packages of the approved welding materials are to be clearly marked with the following descriptions together with the mark of approval by the Society.

(A) Brand
(B) Name of manufacturer
(C) Grade or mark of welding materials
(D) Kind of gas, if used
(E) Electric current and its polarity
(F) Welding position
(G) Date and number of production
(H) Size (diameter of core wire, length of electrode, grain size of flux for automatic submerged arc welding, etc.)

Section 3-1 Anti-corrosive Paints

301. Application

The requirements in this Section apply to tests and inspections for the type approval of primer coating or marine heavy duty coating upon request.

302. Data to be submitted

The following reference data are to be submitted to the Society in addition to those specified in **102.**

(1) In-house inspection department, claim handling organization and inspection facilities
(2) Reference materials and data relating to the manufacturing process and quality control system: Blending details of key components (including the content of aluminium), matters relating to mixing and storage procedures.
(3) Matters relating to packaging, packing and shipment.
(4) Instructions for the application of the paint for which brand approval is made: Surface preparation, required thickness of coat, painting procedure, and matters relating to drying process and multiple coatings.
(5) In-house test results and real ship service experience of the paint brand for which approval is made. Approval certificates issued by other authorities, if any.
(6) Matters relating to falling ball impact test and explosion test.

303. Type tests

1. Test coupons

(1) **Number of test coupons**
Three each test coupons for each test item specified in **Table 3.3.1** are to be prepared.

(2) **Shape of test coupon**
(A) Test coupon for physical properties test To conform to the requirements specified in **Table 3.3.1.**
(B) Test coupon for corrosion resistance test Standard shape of the test coupon is to be as shown in **Fig 3.22.1.** On one face of the test coupon, the paint of the brand under approval application, and on the other side thereof, the paint of ordinary brand (one each oil paint, vinyl and others) for comparative assessment are to be coated. Three test coupons coated on both side with the paint of brand under approval application and each one of test coupon coated with ordinary paint may be accepted as a alternative means. The final coat may be the paint of the brand under approval application or the comparative paint.
(C) Prior to the test the test specimen is to be stamped with the Society's brand.

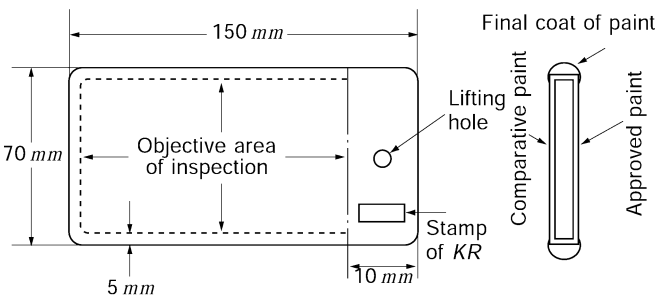

Fig 3.3.1 Test Coupon for Corrosion Resistance Test

(3) **Surface treatment, primer paint and coating**
The surface treatment and painting are to be carried out in accordance with the instruction submitted under the provisions **302.** (4). The film thickness of paint is to be of the minimum recommended by the manufacturer.

2. Test details and acceptance criteria

(1) Approval test for the paint of the brand under approval application are to be carried out in the presence of the Surveyor at the manufacturing plant and approval test items are to be as given in **Table 3.3.1.**

(2) The testing procedures and acceptance criteria are to be as given in **Table 3.3.1.** However, in case where these requirements are found impracticable due to special type of paints, separate considerations may be given.

(3) In case when materials other than salt water, crude oil and gasoline are scheduled to load in the tank applied CoC, corrosion resistance test for the materials is to be carried out. The test method considered appropriate by the Society is to be applied.

(4) Gasoline immersion test, salt water/gasoline immersion test and salt water/crude oil immersion test may not be required for the paint used for sea water ballast tanks.

(5) During execution of the corrosion resistance tests, the Surveyor may attend and make investigation necessary for verification.

Table 3.3.1 Test details and acceptance criteria of anti-corrosive paints

Kind	Test item	Testing procedures	acceptance criteria
Physical properties test	Cross-cut adhesion test (**KS M ISO 2409**)	The test coupon is to be of a mild steel plate of a suitable size for testing. With a sharp knife point the paint coat on the test coupon is to be pierced right down to the steel surface in both the horizontal and vertical directions at 25 places at 2 mm pitch. Stick adhesive tape on the squared-off area encompassed by the 5th vertical and the horizontal line and pull off the tape quickly to judge with the unaided eyes how much of the coat is left on the test coupon.	For a successful test, small peelings are occurred on squared-off area and the peeling-off area of three test coupons are to be within 5~15% of total test area.
	Erichsen test (**KS B 0812, 5529**)	A mild steel test coupon of approximately 100 mm × 90 mm × 0.8 mm coated on a single side is to be subjected to the Erichsen test with a punch diameter of 20 mm, pushing speed 0.1 mm/sec, and pushing distance 6 mm.	For a successful test, peeling-off area of at least two out of three test coupons are to be within 1.0 cm^2.
	Falling ball impact test	A mild steel test coupon of approximately 200 mm × 100 mm × 4 mm coated on one side is to be fixed on a steel base with the painted surface facing upwards and subjected to falling ball impact test with a weight of 300 g dropped thrice from a height of 2.4 m. Thereafter the condition of the paint surface is to be checked after leaving the test coupon at room temperature for a period of one hour.	If cracks and peelings occur in two out of three test coupons and more, the test is not to be approved.
	Flex cracking test (**KS M 5000**)	A 150 mm × 50 mm × 0.3 mm tinned plate is to be painted on one side and flexed through 180° at room temperature keeping the coated side as the outer side (flexing diameter 10 mm, flexing time approximately 1 second).	If cracks and peelings occur in two out of three test coupons and more, the test is not to be approved.
Corrosion resistance test	Salt water immersion test	The test coupon is to be immersed in a 5 % salt water kept at a temperature of 50 ± 5 °C over a period of 3,000 hours (except for CoC : 360 hours) or more. At such times as before immersion, 1,000th hour from the initiation of immersion (taking photographs only), and on completion of immersion, the film thickness of paint is to be measured and colour photographs are to be taken at each such time.	The acceptance criteria for the corrosion resistance tests are to be as given in **Table 3.3.2.**
	Gasoline immersion test	The test coupon is to be immersed in gasoline for 3,000 hours (except for CoC : 360 hours) under room temperature. At such time as before immersion, 1,000th hour from the initiation of immersion (taking photographs only), and on completion of immersion, the film thickness of paint is to be measured and colour photographs are to be taken at each such time.	

Table 3.3.1 Test details and acceptance criteria of anti-corrosive paints (continued)

Kind	Test item	Testing procedures	acceptance criteria
Corrosion resistance test	Hot water immersion test	Fill a container with tap water and heat it to a temperature 80 ± 5 °C and keep the test coupon immersed in it continuously for 1,000 hours (except for CoC : 168 hours) and then take it out and examine the condition of the paint. If there is no abnormality, the test coupon is to be examined after being left for 2 hours. The film thicknesses of paint before and after immersion are to be measured with colour photographs taken.	The acceptance criteria for the corrosion resistance tests are to be as given in **Table 3.3.2.**
	Alternate salt water immersion test	After immersing in a 3 % salt water solution under room temperature for a period of 168 hours (7 days), the test coupon is to be taken out and left in air for 168 hours. Taking this as one cycle, the test coupon is to be subjected to 10 (except for CoC : 2) such cycles consecutively. The paint film thickness is to be measured and colour photographs of the test coupon are to be taken on completion of the 5th cycle and before immersion of the next attempt.	
	Alternate gasoline/salt water immersion test	Two tanks respectively filled with 3 % salt water solution and gasoline are to be prepared and the test coupon is to be immersed in either of them for a period of 168 hours (7 days) and then taken out and immersed in the other tank for another 168 hours. Considering this as one cycle, the process is to be repeated for 10 cycles (except for CoC : 2 cycles). Colour photographs and paint film thickness measurements before immersion, on the 5th cycle, and on completion of the test are to be taken.	
	Alternate salt water/crude oil immersion test	Tests similar to (c) above are to be carried out with 3 % salt water solution and crude oil. Colour photographs and paint film thickness measurements before immersion, on the 5th cycle (only photograph is to be taken), and on completion of the test are to be taken.	
	Salt water spray test (KS D 9502)	Continuous test with salt water spray is to be carried out for a period of 3,000 hours (except for CoC : 360 hours) or more. Colour photographs and paint film thickness measurements before immersion, on the 1,000th hour, and on completion of the test are to be taken.	
Real ship tests		(A) The paints, which have passed the paint film performance tests successfully, are to be subjected to real ship tests. For the real ship and specific painting areas, the manufacturer may give instructions after obtaining approval of the Society. The painting procedures and surface treatment are to be as instructed by the document under the provision **302.** (4), and after application of the paints, visual inspection of paint coat, taking color photographs are to be carried out in the presence of the Surveyor. In ships having a post-painting period of two years, visual inspection, and taking of colour photographs are to be carried out at time of drydocking in the presence of the Surveyor. (B) If the paint has been applied to a ship which has already been put into service 2 years or more, this paint may be regarded as test sample in (A). (C) The primer coating does not require real ship tests.	Standard blistered or peeled off area of the paint coat is to be 1 % or less of the total painted area.

Table 3.3.2 Acceptance Criteria

Class of defects	Size of crack or blister (mm)	Coefficient of defect	No. of defects × coefficient of defect Total number of defects of three test coupons
A (fine)	1 or below	3	10 or below
B (small)	1～2	5	
C (medium)	2～3	7	
D (large)	4 or more	10	

304. Manufacturer approval

The manufacturer is to be subjected to Manufacturer approval in accordance with **Ch 6**.

Section 3-2 Non-slip Paints

311. Application

The requirements in this Section apply to tests and inspections for the type approval of non-slip paints in accordance with the requirements of **Pt 7, Annex 7-3, 7** of the Guidance upon request.

312. Data to be submitted

The reference data in addition to those specified in **102.** are to be submitted to the Society in accordance with **302.**. The tests are to be made by using specimens of the final product.

313. Type tests

1. Test coupons

Three each test coupons for each test item specified in **Table 3.3.3** are to be prepared.

2. Test details and acceptance criteria

Sampling of the precise amounts and test as follows should be done for each type of manufacture in the presence of Surveyor. Also, other tests may be added at the discretion of the Society.

(1) Physical properties test

Tests are to comply with the requirements given in **Table 3.3.3**.

Table 3.3.3 Test details and acceptance criteria of Physical properties test

Test item	Testing procedures	Acceptance criteria
Cross-cut adhesion test	To be in compliance with **Table 3.3.1.** However, remove sand additives and paint with the thickness on the maker's advice.	To be in compliance with **Table 3.3.1.**
Erichsen test	To be in compliance with **Table 3.3.1.**	Acceptance criteria is the reference.
Falling ball impact test	To be in compliance with **Table 3.3.1.** However, thickness of sample to be 6mm and weight to be 1kg.	To be in compliance with **Table 3.3.1.**
Flex cracking test	To be in compliance with **Table 3.3.1.**	Acceptance criteria is the reference.
Abrasion test	To be in compliance with **ASTM D 4060.**(1) However, 3 samples are to be taken for an average.	Within 40% abrasion

Notes;
(1) To be based on resilient calibrase wheels No. CS-17, 1000 cycles, 1kg load given in **ASTM D 4060**. But the others for consideration of paints to be determined on a case-by-case basis upon mutual consultation by the manufacturer and the Society.

(2) Friction test

(A) 3 samples are to be prepared from worn part of the abrasion test finished samples. Friction test procedure is in accordance with Test Method B(Horizontal Pull test) of **ASTM D 1894**. The rubber plate has Shore-A hardness 60~70 is to be adhered to the surface of sliding steel plate. However, other test procedure may be applied at the discretion of the Society.

(B) An average of 5 times on friction test is to be taken from each condition(Dried condition, Wet condition with Synthetic Sea Water according to **ASTM D 1141**, Oily condition with Engine Oil). Also coefficient of friction is given by the following formula.

$$\text{Coefficient of friction} = \frac{\text{Load when sliding steel plate start to move}}{\text{Weight of sliding steel plate}}$$

(C) Average coefficient friction value of 3 samples is not to be less than those obtained by the following formula. Also each coefficient friction value is not to be less than 0.7.

Section	Dry Condition	Wet Condition	Oily Condition
Acceptance Criteria	0.9	0.85	0.75

(3) Corrosion resistance test
Saline water spray test and gasoline deposition test are carried out for corrosion resistance test. Also, test procedure and acceptance criteria are to comply with **303. 2**. However, the test time is to be 360 hours.

(4) Non-flammability test
The procedure and acceptance criteria of the non-flammability test are to comply with **2604. 3**.

314. Manufacturer approval

The manufacturer is to be subjected to Manufacturer approval in accordance with **Ch 6**.

Section 4 Acid Resisting Paints

401. Application

The requirements in this Section apply to tests and inspections for the type approval of acid resisting paints in accordance with the requirements of **Pt 6, Ch 1, 1305.** of the Rules.

402. Data to be submitted

The following reference data are to be submitted to the Society in addition to those specified in **102.**

(1) Mixture ratio of main compositions for each symbol of products.
(2) Data for mixture and storage
(3) Instruction for painting (surface treatment, recommended dry film, thickness application method, drying and over coating method, etc.)
(4) Marking
(5) In-house test results (approval certificates issued by other authorities, if any)

403. Type tests

Approval tests are to comply with the requirements given in **Table 3.4.1.**

Table 3.4.1 Test details and acceptance criteria of acid resisting paints

Kind	Testing procedures
Test specimen	The glass panel (about 150 mm × 70 mm × 2 mm) which is coated on both side is to be used as test specimen, unless otherwise specially specified. Four pieces of test panels are to be made according to coating method and drying condition designated by the manufacturer. The edges of three test specimens are to be duplicated with paraffin or wax, etc. at least 5 mm in width and one test panel is to be used for comparison. (refer to **Fig 3.3.1**)
Test method	(1) A glass bottle for one test panel is prepared as shown in **Fig 3.4.1** and each bottle is filled with acid solutions (5 %, 7.5 %, 10 %) designated by the manufacturer up to 150 mm in depth and then maintained the temperature of solution at designated temperature. The test panel is to be hung by thread so that it may be immersed up to 120 mm as shown in **Fig 3.4.1** and left it immersed for 480 hours. After 480 hours, the test panel is removed from the glass bottle and washed carefully with water and then drained off. The test panel is placed perpendicularly at room temperature for two hours and paint film is examined. In this case, edge of test panel and paint film within 10 mm in width from the immersion level are not examined. 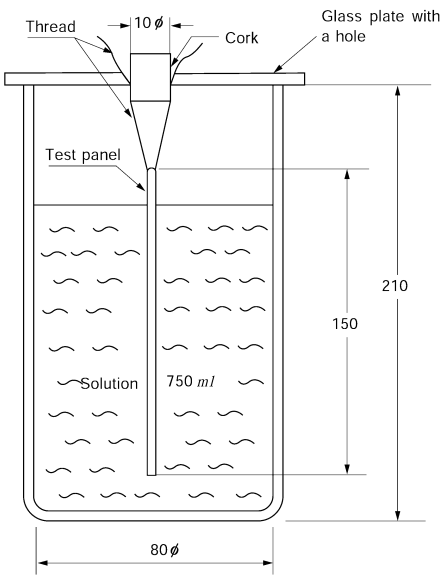 **Fig 3.4.1 Glass Bottle for Test** (Unit : mm)

Table 3.4.1 Test details and acceptance criteria of acid resisting paints (continued)

Kind	Testing procedures
Test method	(2) The inlet of the glass bottle is to be properly faced and the hole of glass plate is plugged with a cork. The test panel is hung with two strings of thread fixed to it and penetrated through the gap between the glass plate and the cork. So the height of the test panel is adjusted by the length of the thread fixed to it.
Acceptance criteria	Two test panels and over are to be examined with the test panel for comparison. In this case, paint film is to be free from cracks, blistering, peeling, pinholding, softening and elusion. There is to be no great change in color and gloss.

404. Manufacturer approval

The manufacturer is to be subjected to Manufacturer approval in accordance with **Ch 6**.

Section 5 Loading Instruments

501. Application

1. The requirements of this Section apply to tests and inspection for type approval of loading instruments fitted on board for the calculation of stability in accordance with the requirements of **Pt 1, Ch 1, 307.** and 405. of the Rules, and for the calculation of longitudinal strength in accordance with the requirements of **Pt 3, Ch 3, 104.** of the Rules and for type approval of container lashing calculation instrument in accordance with the requirements of **Pt 7, Annex 7-2, 9.** of the Guidance.

2. Related to **Par 1** above, the design approval of the Society for the software (program) used in the loading instruments or container lashing calculation instruments refer to requirements specified in **Ch 4, Sec 2. of this Guidance.**

3. The requirements of this Section apply to the instruments used on land to assist several ships.

502. Data to be submitted

The environmental test procedures are to be submitted to the Society in addition to those specified in **102.**

503. Requirements

1. Construction

The loading instrument (computer) is to have sufficient endurance and no difficulty for operating under the following conditions, except where fitted in a special place. Also, humidity is to be considered especially, and a self-monitoring function is recommended to be computerized to prevent fallacy or error caused by failure in the circuit, etc.

(1) Ambient temperature : 0°C to 45°C

(2) Vibration:

Amplitude ±1.0 mm at 2^{+3}_{-0} Hz to 13.2 Hz

Acceleration ±0.7 G at 13.2 Hz to 100 Hz

The vibration during operation is to range from 2 Hz to 100 Hz with an acceleration of ± 0.05 G.

(3) Inclination:

Longitudinal inclination 10°

Transverse inclination 22.5°

(4) Power supply variation:

(A) $A.C.$ power supply

	Permanent value	Transient value
Voltage (rated)	± 10 %	± 20 %, 1.5 sec
Frequency (rated)	± 5 %	± 10 %, 5 sec

(B) $D.C.$ power supply

+30 % to -25 % for rated voltage for equipment connected to the battery during charging

+20 % to -25 % for rated voltage for equipment not connected to the battery during charging

2. The loading instrument is to have proper input/output function including printer. When the printer is provided separately, the type test for the printer is not required.

504. Test and inspection

1. Environmental test

Environmental tests of loading instruments are followed by test item 1 through 9 of **Table 3.23.1** of **2304.** However, the tests for loading instruments to be used on land are not required as a rule.

Section 6 High Holding Power Anchors and Super High Holding Power Anchors

601. Application

1. The requirements in this Section apply to tests and inspection for the approval of high holding power anchors and super high holding power anchors in accordance with requirements in **Pt 4, Ch 8, 304.** of the Rules.

2. The manufacturer who supplies the raw materials of anchors which is subjected to the requirements in this Section is to obtain approval of manufacturing process of raw materials in accordance with the requirements in each Section of **Pt 2, Ch 1** of the Rules.

3. The manufacturer who makes casted anchors in accordance with the requirements of this Section may be considered to comply with the requirements of manufacturing process in **Pt 2, Ch 1, 102.** of the Rules.

602. Data to be submitted

The following reference data are to be submitted to the Society in addition to those specified in **102.**

(1) Kind and type of the anchor
(2) Maximum mass of the anchor
(3) Test data of sea bed holding power and information concerning the anchor
(4) Working standards for welding or casting and heat treatments
(5) Non-destructive testing standards

603. Type tests

1. Type test and acceptance criteria

(1) The type test is to be carried out on an anchor with the mass closest to the maximum applied mass on the test item specified in **Table 3.6.1**, in the presence of the Surveyor. However, in case where these requirements are found impracticable due to special type of anchors, separate considerations may be given.

(2) The testing procedures and acceptance criteria are to be as given in **Table 3.6.1.** However, in case where these requirements are found impracticable, separate considerations may be given.

Table 3.6.1 Type test and acceptance criteria of anchor

Test item	Test method	Acceptance criteria
Material test	(1) To be in compliance with **Pt 2** of the Rule. Casted anchor is to be subjected to the impact test according to the requirements in **Pt 4, Sec 8, 303. 5.** of the Rule. (2) Test specimens of casted anchor are to, in principle, be taken from the body and the test blocks attached thereto.	To meet the Rule requirements
Proof test	To be in compliance with **Pt 4, Sec 8, 309. 3** of the Rule.	
Drop test	Drop test of casted anchor is to be in compliance with **Pt 4, Sec 8, 309. 2.** (1) of the Rule. Dropping is to be made for 3 attempts at least.	To be free from cracks or other harmful defects.
Hammering test	After the drop test, the anchor is to be slung clear of the ground and thoroughly hammered in accordance with **Pt 4, Ch 8, 309. 2.** (2) of the Rules.	
Visual inspection	To be in compliance with **Pt 4, Sec 8, 309. 4** of the Rule.	To meet the Rule requirements
Non-destructive test	To be carried out the extended non-destructive examination in accordance with **Pt 4, Ch 8, 309. 6.** of the Rules.	
Holding power test	(A) Holding power test is to include the holding power measuring test and embed test and is to be carried out on anchors of different mass for respective modes of test in accordance with the requirements specified in **Table 3.6.2.** Where sufficient data are submitted, and if the Society considers appropriate, all or part of the holding power measuring test may be omitted. (B) The holding power measuring test is to be carried out in three types of the soil shown **Table 3.6.2** where the anchor is to be dragged at a fixed speed (as slow as practicable). The sea bed for testing is to be of virgin bed for each attempt of testing. (C) Tests are normally to be carried out from a tug but alternatively shore based tests may be accepted.	To be as deemed appropriate by the Society

Table 3.6.2 Items of Holding Power Test and Numbers of Attempts

Type of anchor		Holding power measuring test
		Soil of sea bed (3)
Two pieces of test anchors	A(2)	3
	a(2)	3
Two pieces of anchors for comparison	B(2)	1
	b(2)	1

NOTES:
(1) The number of test attempts given in this Table may be increased/decreased as considered appropriate by the Society.
(2) Anchors "A" and "B" are to have nearly compatible masses, and the mass of anchor "a" and "b" are to, in principle, have a mass equivalent to 1/10 (1/5 for the super high holding power anchor) of that of anchor "A" and " B" or more.
Anchor "A" and "B" are to, in principle, have a mass a equivalent to 1/10 (1/5 for the super high holding power anchor) of the maximum mass to be approved or more
(3) The tests are to be carried out using three kinds of soils, i.e, sand, mud, clay, etc

2. Test records

After completion of the type test, the manufacturer is to prepare records of the type test as follows, and is to submit three copies to the Society upon receiving confirmation by the Surveyor.
(1) Test records and work records of the manufacturing process on the test anchor (steelmaking process, casting process, heat treatments, etc.)
(2) Testing procedure and test arrangement (explanatory drawings on the testing procedure and test arrangement are to be attached thereto.)
(3) The results of holding power measuring test (in addition to the results of holding power measuring test (H_P/W = Holding Power/Mass), holding power characteristics curves are to be attached thereto.)
(4) Properties of the soil of the sea bed (hardness, composition) and flatness of the sea bed.
(5) The dragging speed of the anchor in the holding power measuring test.

Section 7-1 Emergency Towing Arrangements

701. Application

1. The requirements in this Section apply to tests and inspections for the type approval of emergency towing arrangements (hereinafter called *ETA*) for ships in accordance with requirements in **Pt 4, Ch 8, 205.** of the Rules. The type approval of emergency towing arrangements is made for a whole arrangement consisting of the components given in the **Table 3.7.1.**

Table 3.7.1 Major Components of the ETA

Components	Forward ETA	Aft ETA
Pick-up gear	(Optional)	Yes
Towing pennant	(Optional)	Yes
Chafing gear	Yes	(Depending on design)
Fairlead	Yes	Yes
Strong point	Yes	Yes
Pedestal roller	Yes	(Depending on design)

2. The type approval of emergency towing arrangements is made for each of forward *ETA* and aft *ETA*.

3. The applicant of the type approval is not necessarily to be a manufacturer of the components, but to be those responsible for quality of the products.

4. The manufacturer who makes major components of the *ETA* shall obtain the Approval of Manufacturing Process of raw materials in accordance with the requirements in **Pt 2, Ch. 1, 102** of the Rule.

702. Data to be submitted

The following reference data are to be submitted to the Society in addition to those specified in **102.**

(1) Outline of manufacturing process of each major component
(2) General arrangement of *ETA* and detailed assembly drawing of each component (materials of all components to be specified)
(3) Operation manual of *ETA* (including each case of operation by ship's main power and emergency power)
(4) Introduction of applicant and manufacturers of components
(5) Kind, mechanical properties and chemical composition of major materials for each component
(6) Method of heat treatment (if any required by the applied standard)
(7) Method of nondestructive test and list of qualified persons and qualification grade
(8) Data of quality control system of each component

703. Type tests

1. Test methods and acceptance criteria

(1) Approval tests of *ETA* are to be carried out in the presence of the Surveyor at the manufacturing plant and approval test items are to be as given in **Table 3.7.2.**
(2) The testing procedures and acceptance criteria are to be as given in **Table 3.7.2.** However, in case where these requirements are found impracticable, decisions are left to the discretion of the Society.

Table 3.7.2 Type test and acceptance criteria of Emergency Towing Arrangements

Test item	Test method	Acceptance criteria
Strength test	(A) Strength components of ETA, i.e., towing pennant, chafing gear, fairlead and strongpoint, etc., are to be assembled and fitted on the test unit according to the manufacturer's drawings. Tensile loads are to be applied and kept for at least 1 minute to the towing pennant or chafing gear with the tensile force directions and test loads as given in the following (a) and (b). (a) Tensile force directions (i) 90 °C from the ship's centerline to port and starboard, and 30 °C vertical downwards (ii) 0 °C sideway from the ship's centerline, and 30 °C vertical downwards (b) Test loads (i) 2,000 kN for 1,000 kN type ETA (ii) 4,000 kN for 2,000 kN type ETA (B) Towing pennant, chafing gear, fairlead and strongpoint to be used for the strength test in (A) above, are to be of the products as follows: (a) Towing pennant, chafing chain and their connecting parts They are to be made by a manufacturer with the manufacturing process approved by the Society in principle, and to be accepted to the production test by the Society. (b) Fairlead and strongpoint They are to comply with the requirements in **Pt 2** of the Rules and to be wholly examined by ultrasonic test in principle, but, if impracticable, may be examined by effective nondestructive test such as magnetic particle test. (C) For other major components of strength member than those in (B) above, the Society may require certain tests or inspections prior to the strength test, if deemed necessary.	Each component of the ETA is to neither be broken nor destroyed.
Deployment test	A deployment test as given in the following (A) and (B) is to be carried out during night time condition using prototypes fitted on a ship according to the manufacturer's drawings. In this test, only emergency power is to be used. (A) The aft ETA is to be deployed in accordance with the operation manual prepared by the manufacturer, and the following (a) and (b) are to be verified. (a) It is to be capable of being deployed within 15 minutes in harbour conditions. Time duration of deployment operation is counted from the time when a lid of the pick-up gear container is opened, to the time when inboard termination of the towing pennant or chafing gear touches to the strongpoint without any trouble. (b) The pick-up gear is to be designed for manual operation by one person taking into account the absence of power. (B) The forward ETA is to be deployed within 1 hour in harbour conditions in accordance with the operation manual prepared by the manufacturer. Ten persons in max. are to be employed in the deployment work on board the ship during the test.	ETA is to be deployed in accordance with the operation manual prepared by the manufacture
Strength test for wire rope terminations of towing pennant	Wire rope terminations of towing pennant such as splicing, socket, etc., are to be prototype tested for 3 pieces of test specimens in accordance with the manufacturer's specifications, by the test load specified in (A) of strength test above for at least 1 minute.	In case where even 1 piece of the test specimen could not withstand the test load, the proposed termination is not to be accepted.
Others	To be as deemed appropriate by the Society	To be as deemed appropriate by the Society

Section 7-2 Equipment for mooring at SPM

711. Application

1. The requirements in this Section apply to tests and inspections for the type approval of the equipment for mooring at SPM in accordance with the requirements of **Pt 4, Ch 10, 101. 3.** of the Rules.

2. The applicant of the type approval is not necessarily to be a manufacturer of the components, but to be those responsible for quality of the products.

3. The manufacturer who makes major components of the equipment for mooring at SPM shall obtain the Approval of Manufacturing Process of raw materials in accordance with the requirements in **Pt 2, Ch. 1, 102** of the Rule.

712. Data to be submitted

The following reference data are to be submitted to the Society in addition to those specified in **102**.

(1) Outline of manufacturing process of each major component
(2) General arrangement of the equipment for mooring at SPM and detailed assembly drawing of each component (materials of all components to be specified)
(3) Strength calculation sheets with 2 times the required safety factor
(4) Operation manual of the equipment for mooring at SPM
(5) Introduction of applicant and manufacturers of components
(6) Kind, mechanical properties and chemical composition of major materials for each component
(7) Method of heat treatment (if any required by the applied standard)
(8) Method of nondestructive test and list of qualified persons and qualification grade
(9) Data of quality control system of each component

713. Type tests

1. Test methods and acceptance criteria

(1) Components of equipment for mooring at SPM are to be assembled and fitted on the test unit according to the manufacturer's drawings. Tensile loads are to be applied with the proof test loads equivalent to the safe working load specified in **Table 3.7.3** and following tensile test direction, and kept for at least 1 minute. Upon completion of type test, components of equipment for mooring at SPM are to have no permanent deformation.
(A) 90 degrees from the ship's centerline to port and starboard, and 30 degrees vertical downwards
(B) 0 degrees sideway from the ship's centerline, and 30 degrees vertical downwards

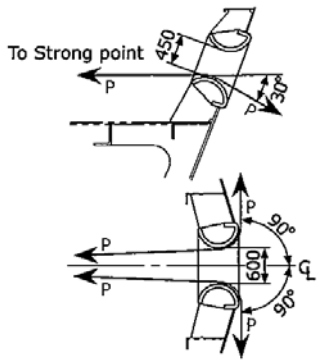

Fig 3.7.1 Tensile force directions

Table 3.7.3 Safety working load

Deadweight (ton)	Safe working load(SWL) (ton)
DWT ≤ 100,000	200
100,000 < DWT ≤ 150,000	250
150,000 < DWT	350

(2) Chain stoppers and fairleads are to be wholly examined by ultrasonic test in principle, but, if impracticable, may be examined by effective non-destructive test such as magnetic particle test.

Section 8 Diesel Engines

801. Application

1. The requirements in this Section apply to tests and inspection for the approval of new type diesel engines or no service records to the Society on the basis of the requirements in **Pt 5, Ch 2, 211. 3** of the Rules.

2. The definition of low, medium and high speed engine in this section, is to be according to **Table 5.2.1** of **Pt 5** of the Rules.

3. An approval for a particular type of engine of which tests and inspection carried out at any place at any manufacture will be accepted for all engines of the same type including different number of cylinders built by licensees and licensors.

4. The requirements in this Section apply, in general, to each engine type of which either of the following is different to that of an approved engine type. *(2017)*

(1) Bore and stroke
(2) Method of injection(direct or indirect injection)
(3) Valve and injection operation (by cams or electronically controlled)
(4) Kind of fuel (liquid, dual-fuel, gaseous)
(5) Working cycle(2-stroke, 4-stroke)
(6) Turbo-charging system (pulsating or constant pressure)
(7) Charging air cooling system (e.g. with or without intercooler)
(8) Cylinder arrangement (in-line, vee-type)

One type test will be considered adequate to cover a range of different numbers of cylinders. However, a type test of an in-line engine may not always cover the vee-type. As required by the Society, separate type tests may be required for the vee-type. On the other hand, a type test of a vee-type engine covers the in-line engines, unless the bmep is higher.

Items such as axial crankshaft vibration, torsional vibration in camshaft drives, and crankshafts, etc. may vary considerably with the number of cylinders and may influence the choice of engine to be selected for type testing.

(9) Cylinder power, speed and cylinder pressures

(A) The engine is generally type approved up to the tested ratings and pressures (100% corresponding to MCR).

(B) Provided documentary evidence of successful service experience with the classified rating of 100% is submitted, an increase may be permitted without a new type test if the increase from the type tested engine is within the following range. In this case, if crankshaft calculation and crankshaft drawings are modified, the drawing approval is to be required.

(a) 5 % of the maximum combustion pressure, or
(b) 5 % of the mean effective pressure, or
(c) 5 % of the rpm

(C) Providing maximum power is not increased by more than 10%, an increase of maximum approved power may be permitted without a new type test provided engineering analysis and evidence of successful service experience in similar field applications (even if the application is not classified) or documentation of internal testing are submitted if the increase from the type tested engine is within the following range.

(a) 10 % of the maximum combustion pressure, or
(b) 10 % of the mean effective pressure, or
(c) 10 % of the rpm

(D) De-rated engine

If an engine has been drawing approved, and internal testing per Stage A is documented to a rating higher than the one type tested, the Type Approval may be extended to the increased power, mean effective pressure, rpm upon submission of an extended delivery test report as belows.

(a) Test at over speed (only if nominal speed has increased)
(b) Rated power, i.e. 100 % output at 100 % torque and 100 % speed corresponding to load point 1 in **Fig 3.8.1**, 2 measurements with one running hour in between
(c) Maximum permissible torque (normally 110 %) at 100 % speed corresponding to load point 3 in **Fig 3.8.1,** or maximum permissible power (normally 110 %) and speed ac-

cording to nominal propeller curve corresponding to load point 3a in **Fig 3.8.1**, ½ hour

(d) 100 % power at maximum permissible speed corresponding to load point 2 in **Fig 3.8.1**, ½ hour

5. Where the manufacturer apply to the approval by manufacturer's rating not the maximum continuous output of engine, the Society correspondingly apply to the requirements in this Section.

6. An integration test demonstrating that the response of the complete mechanical, hydraulic and electronic system is as predicted maybe carried out for acceptance of sub-systems (Turbo Charger, Engine Control System, Dual Fuel, Exhaust Gas treatment, etc.) separately approved. The scope of these tests shall be proposed by the designer/licensor taking into account of impact on engine.

802. Data to be submitted

In addition to those specified in **102.**, the documents is to be submitted according to **Table 5.1.4** and **Table 5.1.5** of **Pt 5, Ch 1, 203.** of the Rules.

803. Type tests

1. Objectives

The type testing is to be arranged to represent typical foreseen service load profiles, as specified by the engine builder, as well as to cover for required margins due to fatigue scatter and reasonably foreseen in-service deterioration as followings.

(1) Parts subjected to high cycle fatigue (HCF) such as connecting rods, cams, rollers and spring tuned dampers where higher stresses may be provided by means of elevated injection pressure, cylinder maximum pressure, etc.

(2) Parts subjected to low cycle fatigue (LCF) such as “hot” parts when load profiles such as idle - full load - idle (with steep ramps) are frequently used.

(3) Operation of the engine at limits as defined by its specified alarm system, such as running at maximum permissible power with the lowest permissible oil pressure and/or highest permissible oil inlet temperature.

2. Safety precautions

(1) Before any test run is carried out, all relevant equipment for the safety of attending personnel is to be made available by the manufacturer/shipyard and is to be operational, and its correct functioning is to be verified.

(2) This applies especially to crankcase explosive conditions protection, but also over speed protection and any other shut down function.

(3) The inspection for jacketing of high pressure fuel oil lines and proper screening of pipe connections is also to be carried out before the test runs.

(4) Interlock test of turning gear is to be performed when installed.

3. Test stages

The type tests are subdivided into three stages below.

(1) Stage A (Internal tests)
Functional tests and collection of operating values including test hours during the internal tests, the relevant results (including photographs which show the conditions of each component after the internal tests) of which are to be presented to the Society during the stage B.

(2) Stage B (Approval tests)
Operation test in the presence of the Surveyor.

(3) Stage C (Component inspection)
Component inspections by the Surveyor after completion of the test programme. The engine manufacturer will have to compile all results and measurements for the engine tested during the approval tests in a report, which will have to be submitted to the Society.

4. The complete type testing program is subject to approval by the Society. The extent the Surveyor’s attendance is to be agreed in each case, but at least during stage B and C. Testing prior to the witnessed type testing (stage B and C), is also considered as a part of the complete type testing program.

5. Upon completion of complete type testing (stage A through C), a type test report is to be submitted to the Society for review. The type test report is to contain the followings.

(1) Overall description of tests performed during stage A. Records are to be kept by the builders QA management for presentation to the Society.
(2) Detailed description of the load and functional tests conducted during stage B.
(3) Inspection results from stage C.

6. The type testing is to substantiate the capability of the design and its suitability for the intended operation. Special testing such as LCF and endurance testing will normally be conducted during stage A. High speed engines for marine use are normally to be subjected to an endurance test of 100 hours at full load. Omission or simplification of the type test may be considered for the type approval of engines with long service experience from non-marine fields or for the extension of type approval of engines of a well-known type, in excess of the limits given in **801. 4**.

Propulsion engines for high speed vessels that may be used for frequent load changes from idle to full are normally to be tested with at least 500 cycles (idle - full load - idle) using the steepest load ramp that the control system (or operation manual if not automatically controlled) permits. The duration at each end is to be sufficient for reaching stable temperatures of the hot parts.

7. Measurements and recordings

(1) During all testing the ambient conditions (air temperature, air pressure and humidity) are to be recorded.
(2) As a minimum, the following engine data are to be measured and recorded.
(A) Engine rpm and torque
(B) Maximum combustion pressure and Mean indicated pressure for each cylinder - For engines where the standard production cylinder heads are not designed for such measurements, a special cylinder head made for this purpose may be used. In such a case, the measurements may be carried out as part of Stage A and are to be properly documented. Where deemed necessary e.g. for dual fuel engines, the measurement of maximum combustion pressure and mean indicated pressure may be carried out by indirect means, provided the reliability of the method is documented.
(C) Charging air pressure and temperature
(D) Exhaust gas temperature
(E) Fuel rack position or similar parameter related to engine load
(F) Turbocharger speed
(G) All engine parameters that are required for control and monitoring for the intended use (propulsion, auxiliary, emergency)

Calibration records for the instrumentation used to collect data as listed above are to be presented and reviewed by the attending Surveyor. Additional measurements may be required in connection with the design assessment.

8. Details of tests

Test items on stage A, B and C are to be as given in **Table 3.8.1.** However, during the stage B, deviations from the items, if any, are to be agreed with the Society.

Table 3.8.1 Details of test in stage A, B and C

Test stage	Details of test
stage A	(1) Operation at the load points 25 %, 50 %, 75 %, 100 % and 110 % of the maximum rated power and other load points considered important, at engine speed of along the nominal (theoretical) propeller curve (if applicable mode of operation i.e. driving controllable pitch propellers) and at constant speed for propulsion engines, and at constant speed for engines intended for generating sets or auxiliary machinery. (2) Operation at the limit points of the permissible operating range. These limit points are to be defined by the engine manufacturer. (3) For high speed engines, the 100 hr full load test and the low cycle fatigue test apply as required in connection with the design assessment. (4) Other items deemed to be verified by the Society. (Vibration measurement, torsional vibration measurement, noise measurement, etc.)
stage B	(1) Operation at each load point below (an operating time of two hours is to be required at the load point in (A) and two sets of readings are to be taken at a minimum interval of one hour, an operating time of 0.5 hour can be normally assumed per each load point other than (A)) (A) Rated power, i.e. 100 % output at 100% torque and 100% revolution (corresponding to load point 1 in **Fig 3.8.1**). If operation of the engine at limits as defined by its specified alarm system (e.g. at alarm levels of lub oil pressure and inlet temperature) is required, the test should be made here. (B) 100% power at maximum permissible revolution (corresponding to load point 2 in **Fig 3.8.1**) (C) Maximum permissible torque (normally 100 %) at 100 % revolution (corresponding to load point 3 in **Fig 3.8.1**) or maximum permissible power (normally 110 %) and 103.2 % revolution according to nominal propeller curve (corresponding to load point 3a in **Fig 3.8.1**). Load point 3 (or 3a as applicable) is to be replaced with a load that corresponds to the specified overload and duration approved for intermittent use. This applies where such overload rating exceeds 110% of MCR. (D) Minimum permissible revolution at 100 % torque (corresponding to load point 4 in **Fig 3.8.1**) (E) Minimum permissible revolution at 90 % torque (corresponding to load point 5 in **Fig 3.8.1**). Applicable to propulsion engines only. (F) Partial loads, e.g. 25 %, 50 %, and 75 % of rated power and revolution according to nominal propeller curve i.e. 90.8 %, 79.3 % and 62.9 % speed (corresponding to load points 6, 7 and 8 in **Fig 3.8.1**) for propulsion engines (G) Partial loads, e.g. 25 %, 50 % and 75 % of rated power and rated speed with constant governor setting (corresponding to load points 9, 10 and 11 in **Fig 3.8.1**) for engines intended for generator sets or auxiliary machinery (H) Crosshead engines not restricted for use with C.P. propellers are to be tested with no load at the associated maximum permissible engine speed. (2) For 2-stroke propulsion engines, the achievable continuous output when operating along the nominal propeller curve is to be determined in the case of turbocharger damage. Engines intended for single propulsion with a fixed pitch propeller are to be able to run continuously at a speed (r.p.m.) of 40 % of full speed along the theoretical propeller curve when one turbocharger is out of operation. (The test can be performed by either by-passing the turbocharger, fixing the turbocharger rotor shaft or removing the rotor.) (3) Verification of the lowest specified propulsion engine speed according to the nominal propeller curve as specified by the engine designer (even though it works on a water-brake). During this operation, no alarm shall occur. (4) Starting tests, for non-reversible engines and/or starting and reversing tests, for reversible engines (for the purpose of determining the minimum air pressure and the consumption for a start.) (5) Governor test for compliance with **Pt 5, Ch 2, 203. 1** of the Rules. However, prime movers for generators are to comply with the requirements in **Pt 6, Ch 1, 302.** of the Rules for Classification of Steel Ships. (6) Testing the safety system, particularly for overspeed and low lubricating oil pressure (The over-speed test is to be carried out and is to demonstrate that the engine is not damaged by an actual engine overspeed within the overspeed shutdown system set-point. This test may be carried out at the manufacturer's choice either with or without load during the speed overshoot.)

Table 3.8.1 Details of test in stage A, B and C (continued)

Test stage	Details of test
stage B	(7) For electronically controlled diesel engines integration tests shall verify that the response of the complete mechanical, hydraulic and electronic system is as predicted for all intended operational modes. The scope of these tests shall be agreed with the Society for selected cases based on the FMEA. (8) Supplementary tests when required for engines intended for emergency services (9) Verification of compliance with requirements for jacketing of high-pressure fuel oil lines, screening of pipe connections in piping containing flammable liquids and insulation of hot surfaces. (A) The engine is to be inspected for jacketing of high-pressure fuel oil lines, including the system for the detection of leakage, and proper screening of pipe connections in piping containing flammable liquids. (B) Proper insulation of hot surfaces is to be verified while running the engine at 100% load, alternatively at the overload approved for intermittent use. Readings of surface temperatures are to be done by use of Infrared Thermoscanning Equipment. Equivalent measurement equipment may be used when so approved by the Society. Readings obtained are to be randomly verified by use of contact thermometers. (10) Other test items deemed necessary by the Society
stage C	(1) The crankshaft deflections are to be measured in the specified (by designer) condition (except for engines where no specification exists). (2) High speed engines for marine use are normally to be stripped down for a complete inspection after the type test. (3) For all the engines other than (2), immediately after the test run the components of one cylinder for in-line engines and two cylinders for V-engines are presented for inspections as follows (engines with long service experience from non-marine fields can have a reduced extent of opening). (A) Piston removed and dismantled (B) Crosshead bearing, dismantled (C) Guide planes (D) Connecting rod bearings (big and small end) dismantled (special attention to serrations and fretting on contact surfaces with the bearing backsides) (E) Main bearing dismantled (F) Cylinder liner in the installed condition (G) Cylinder head, valves disassembled (H) cam drive gear or chain, camshaft and crankcase with opened covers. (The engine must be turnable by turning gear for this inspection.) (4) If deemed necessary by the surveyor, further dismantling of the engine may be required.

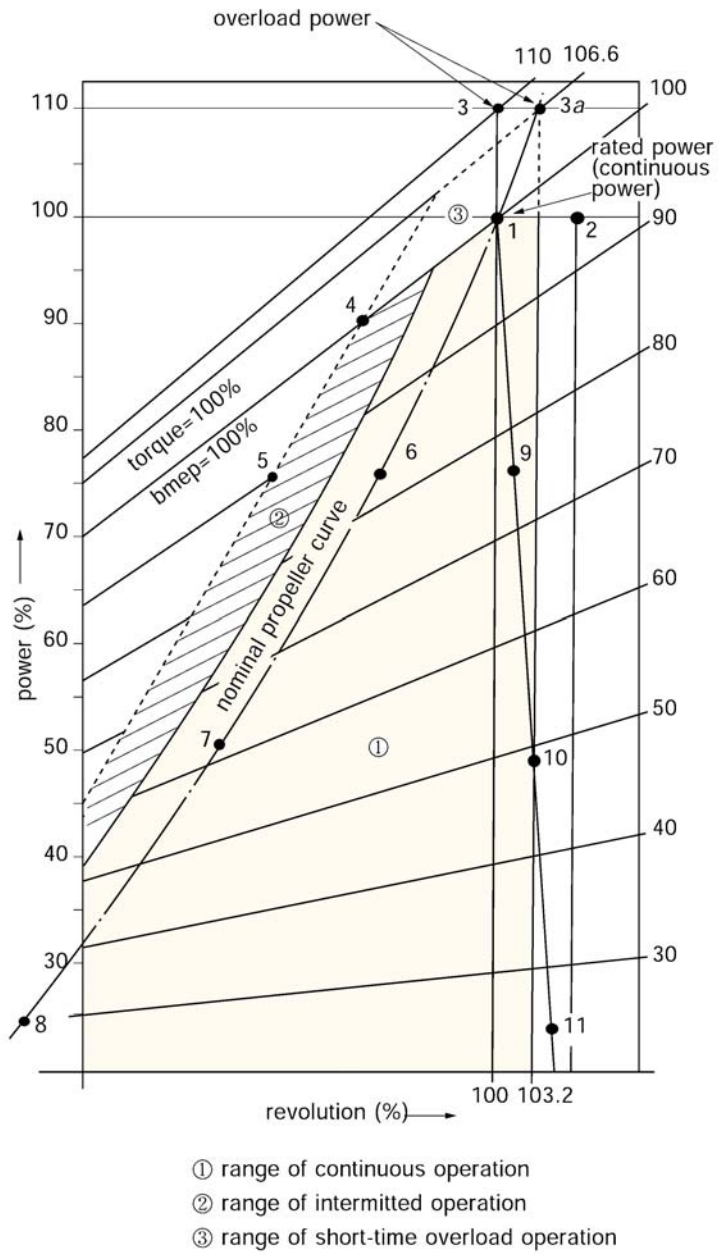

Fig 3.8.1 Power/Revolution Diagram

Section 9 Crankcase Explosion Relief valves

901. Application

The requirements in this Section apply to tests and inspections for the type approval of crankcase explosion relief valves intended to be fitted to engines and gear cases in accordance with the requirements of **Pt 5, Ch 2, 203. 4.** of the Rules. This test procedure is only applicable to explosion relief valves fitted with flame arresters.

902. Data to be submitted

The following reference data are to be submitted to the Society in addition to those specified in **102.**

(1) Accreditation certificate of test house
(2) Details of test vessel and attachment
(3) Test data performed previously at the manufacturer's works

903. Type tests

1. Test houses

The test houses where testing is carried out are to be accredited to a National or International Standard, e.g. **KS Q ISO IEC 17025**, and the test facilities are to be equipped so that they can perform and record explosion testing in accordance with The requirements in this Section

2. Valves to be tested

(1) The valves used for type test shall be selected from the manufacturer’s normal production line by the Surveyor witnessing the tests and three valves for each size shall be selected. However, in case where the valves produced in series comply with the requirements specified in **4.**, type test may be exempted.
(2) The valves selected for type testing are to have been previously tested at the manufacturer's works to demonstrate that the opening pressure is in accordance with the specification within a tolerance of ±20% and that the valve is air tight at a pressure below the opening pressure for at least 30 seconds.
(3) In case where the orientation of installation could be changed, the valves are to be tested for each intended installation orientation.

3. Approval tests are to comply with the requirements given in **Table 3.9.1.**

Table 3.9.1 Type test and acceptance criteria of Crankcase Explosion Relief valve

Kinds	Requirements
Explosion test process	(1) All explosion tests to verify the functionality of crankcase explosion relief valves are to be carried out using an air and methane mixture with a methane concentration of 9.5 % ±0.5 %. The pressure in the test vessel is to be not less than atmospheric and not exceed 0.2 bar. (2) The concentration of methane in the test vessel is to be measured in the top and bottom of the vessel and is not to differ by more than 0.5%. (3) The ignition of the methane and air mixture is to be made at the centreline of the test vessel at a position approximately one third of the height or length of the test vessel opposite to where the valve is mounted. (4) The ignition is to be made using a maximum 100 joule explosive charge.
Test vessel for explosion testing	(1) The test vessel for explosion testing is to have documented dimensions. The dimensions are to be such that the vessel is not "pipe like" with the distance between dished ends being not more than 2.5 times its diameter. The internal volume of the test vessel is to include any standpipe arrangements. (2) The pressure measuring equipment is to be capable of measuring the pressure in the test vessel in at least two positions, one at the valve(P2 in **Fig 3.9.1**) and the other at the test vessel centre(P1 in **Fig 3.9.1**). The measuring arrangements are to be capable of measuring and recording the pressure changes throughout an explosion test at a frequency recognising the speed of events during an explosion. The result of each test is to be documented by video recording and if necessary by recording with a heat sensitive camera. (3) The test vessel is to be provided with a flange, located centrally at one end perpendicular to the vessel longitudinal axis, for mounting the explosion relief valve. The test vessel is to be arranged in an orientation consistent with how the valve will be installed in service, i.e., in the vertical plane or the horizontal plane.

Table 3.9.1 Type test and acceptance criteria of Crankcase Explosion Relief valve

Kinds		Requirements
Test vessel for explosion testing		(4) A circular plate is to be provided for fitting between the pressure vessel flange and valve to be tested with the following dimensions: a) Outside diameter of 2 times the outer diameter(D2 in **Fig 3.9.1**) of the valve top cover. b) Internal bore having the same internal diameter(D1 in **Fig 3.9.1**) as the valve to be tested. (5) The test vessel is to have connections for measuring the methane in air mixture at the top(G2 in **Fig 3.9.1**) and bottom(G1 in **Fig 3.9.1**). (6) The test vessel is to be provided with a means of fitting an ignition source at a position approximately one third of the height or length of the test vessel opposite to where the valve is mounted. (7) The test vessel volume is to be as far as practicable, related to the size and capability of the relief valve to be tested. In general, the volume is to correspond to the requirement for the free area of explosion relief valve to be not less than 115 cm^2/m^3 of crankcase gross volume. This means that the testing of a valve having 1150 cm^2 of free area, would require a test vessel with a volume of 10 m^3. Where the free area of relief valves is greater than 115 cm^2/m^3 of the crankcase gross volume, the volume of the test vessel is to be consistent with the design ratio. In no case is the volume of the test vessel to vary by more than +15% to -15% from the design cm^2/m^3 volume ratio. (8) The test facilities are to have equipment for controlling and measuring a methane gas in air concentration within a test vessel to an accuracy of ± 0.1%. 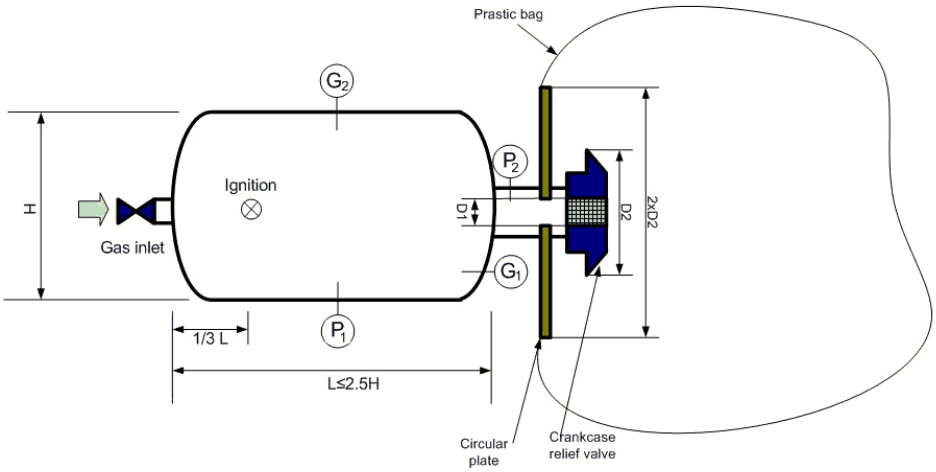 **Fig 3.9.1 test vessel for explosion testing**
Explosion testing	General	(1) Where valves are to be installed on an engine or gear case with shielding arrangements to deflect the emission of explosion combustion products, the valves are to be tested with the shielding arrangements fitted. (2) Successive explosion testing to establish a valve's functionality is to be carried out as quickly as possible during stable weather conditions. (3) The pressure rise and decay during all explosion testing is to be recorded. (4) The external condition of the valves is to be monitored during each test for indication of any flame release by video and heat sensitive camera. (5) For obtaining the type approval, the explosion testing for each valves shall be done for three stages respectively.
	Stage 1	Two explosion tests are to be carried out with the flange opening fitted with the circular plate covered by a 0.05 mm thick polythene film. These tests establish a reference pressure level for determination of the effects of a relief valve in terms of pressure rise in the test vessel.
	Stage 2	(1) Two explosion tests are to be carried out on three different valves of the same size. Each valve is to be mounted in the orientation that it requires approval for installation i.e., in the vertical or horizontal position with the circular plate located between the valve and pressure vessel mounting flange.

Table 3.9.1 Type test and acceptance criteria of Crankcase Explosion Relief valve (continued)

Kinds		Requirements
Explosion testing	Stage 2	(2) The first of the two tests on each valve is to be carried out with a 0.05mm thick polythene bag, having a minimum diameter of three times the diameter of the circular plate and volume not less than 30% of the test vessel, enclosing the valve and circular plate. Before carrying out the explosion test the polythene bag is to be empty of air. The polythene bag is required to provide a readily visible means of assessing whether there is flame transmission through the relief valve following an explosion. (During the test, the explosion pressure will open the valve and some unburned methane/air mixture will be collected in the polythene bag. When the flame reaches the flame arrester and if there is flame transmission through the flame arrester, the methane/air mixture in the bag will be ignited and this will be visible.) (3) Provided that the first explosion test successfully demonstrated that there was no indication of combustion outside the flame arrester and there are no visible signs of damage to the flame arrester or valve, a second explosion test without the polythene bag arrangement is to be carried out as quickly as possible after the first test. During the second explosion test, the valve is to be visually monitored for any indication of combustion outside the flame arrester and video records are to be kept for subsequent analysis. The second test is required to demonstrate that the valve can still function in the event of a secondary crankcase explosion. (4) After each explosion, the test vessel is to be maintained in the closed condition for at least 10 seconds to enable the tightness of the valve to be ascertained. The tightness of the valve can be verified during the test from the pressure/time records or by a separate test after completing the second explosion test.
	Stage 3	Carry out two further explosion tests as described in Stage 1. These further tests are required to provide an average base line value for assessment of pressure rise recognising that the test vessel ambient conditions may have changed during the testing of the explosion relief valves in Stage 2.
Assessment and records		(1) The valves to be tested are to have evidence of design appraisal/approval by the Society (2) The designation, dimensions and characteristics of the valves to be tested are to be recorded. This is to include the free area of the valve and of the flame arrester and the amount of valve lift at 0.2bar. (3) The test vessel volume is to be determined and recorded. (4) For acceptance of the functioning of the flame arrester there is not to be any indication of flame or combustion outside the valve during an explosion test. This should be confirmed by the test laboratory taking into account measurements from the heat sensitive camera. (5) The pressure rise and decay during an explosion is to be recorded, with indication of the pressure variation showing the maximum overpressure and steady underpressure in the test vessel during testing. The pressure variation is to be recorded at two points in the pressure vessel. (6) The effect of an explosion relief valve in terms of pressure rise following an explosion is ascertained from maximum pressures recorded at the centre of the test vessel during the three stages. The pressure rise within the test vessel due to the installation of a relief valve is the difference between average pressure of the four explosions from Stages 1 and 3 and the average of the first tests on the three valves in Stage 2. The pressure rise is not to exceed the limit specified by the manufacturer. (7) The valve tightness is to be ascertained by verifying from the records at the time of testing that an underpressure of at least 0.3bar is held by the test vessel for at least 10 seconds following an explosion. This test is to verify that the valve has effectively closed and is reasonably gas-tight following dynamic operation during an explosion. (8) After each explosion test in Stage 2, the external condition of the flame arrester is to be examined for signs of serious damage and/or deformation that may affect the operation of the valve. (9) After completing the explosion tests, the valves are to be dismantled and the condition of all components ascertained and documented. In particular, any indication of valve sticking or uneven opening that may affect operation of the valve is to be noted. Photographic records of the valve condition are to be taken and included in the report.

4. Design series qualification

(1) The qualification of quenching devices to prevent the passage of flame can be evaluated for other similar devices of identical type where one device has been tested and found satisfactory.

(2) The quenching ability of a flame arrester depends on the total mass of quenching lamellas/mesh. Provided the materials, thickness of materials, depth of lamellas/thickness of mesh layer and the quenching gaps are the same, then the same quenching ability can be qualified for different sizes of flame arresters subject to (a) and (b) being satisfied. However valves which could not be subjected to this method shall be verified by the method as deemed appropriate by the Society.

(a) $\frac{n_1}{n_2} = \sqrt{\frac{S_1}{S_2}}$

(b) $\frac{A_1}{A_2} = \frac{S_1}{S_2}$

Where:

n_1 = total depth of flame arrester corresponding to the number of lamellas of size 1 quenching device for a valve with a relief area equal to S_1

n_2 = total depth of flame arrester corresponding to the number of lamellas of size 2 quenching device for a valve with a relief area equal to S_2

A_1 = free area of quenching device for a valve with a relief area equal to S_1

A_2 = free area of quenching device for a valve with a relief area equal to S_2

(3) The qualification of explosion relief valves of larger sizes than that which has been previously satisfactorily tested in accordance with this Section can be evaluated where valves are of identical type and have identical features of construction subject to the following:

(a) The free area of a larger valve does not exceed three times + 5% that of the valve that has been satisfactorily tested.

(b) One valve of the largest size, subject to (a), requiring qualification is subject to satisfactory testing required by **903. 2.** (2) and stage 2 explosion testing specified in **Table 3.9.1** except that a single valve will be accepted in item (1) of stage 2 explosion testing and the volume of the test vessel is not to be less than one third of the volume required in item (7) of test vessel specified in **Table 3.9.1**

(c) The assessment and records are to be in accordance with the requirements specified in **Table 3.9.1** noting that item (6) will only be applicable to Stage 2 for a single valve.

(4) The qualification of explosion relief valves of smaller sizes than that which has been previously satisfactorily tested in accordance with this Sections can be evaluated where valves are of identical type and have identical features of construction subject to the following:

(a) The free area of a smaller valve is not less than one third of the valve that has been satisfactorily tested.

(b) One valve of the smallest size, subject to (a), requiring qualification is subject to satisfactory testing required by **903. 2.** (2) and stage 2 explosion testing specified in **Table 3.9.1** except that a single valve will be accepted in item (1) of stage 2 explosion testing and the volume of the test vessel is not to be more than the volume required in item (7) of test vessel specified in **Table 3.9.1**

(c) The assessment and records are to be in accordance with the requirements specified in **Table 3.9.1** noting that item (6) will only be applicable to Stage 2 for a single valve.

(5) Valves passed the type tests specified in this Section and valves having sizes between valves qualified according to the requirements in (3) and (4) may be qualified without type tests provided that calculation result of (2) is satisfactory.

5. Test report

The test facility is to deliver a full report that includes the following information and documents:

(1) Test specification.

(2) Details of test pressure vessel and valves tested.

(3) The orientation in which the valve was tested, (vertical or horizontal position).

(4) Methane in air concentration for each test.

(5) Ignition source
(6) Pressure curves for each test.
(7) Video recordings of each valve test.
(8) The assessment and records stated in **Table 3.9.1**

Section 10 Crankcase Oil Mist Detection and Alarm Equipment

1001. Application

The requirements in this Section apply to tests and inspections for the type approval of crankcase oil mist detection and alarm equipment in accordance with the requirements of **Pt 5, Ch 2, 203. 10.** of the Rules.

1002. Data to be submitted

The following reference data are to be submitted to the Society in addition to those specified in **102.**

(1) Description of oil mist detection equipment and system including alarms
(2) Schematic layout of engine oil mist detection arrangements showing location of detectors/sensors and piping arrangements and dimensions
(3) Maintenance and test manual which is to include the following information
  (A) Intended use of equipment and its operation
  (B) Functionality tests (to demonstrate that the equipment is operational and that any faults can be identified and corrective actions notified)
  (C) Maintenance routines and spare parts recommendations
  (D) Limit setting and instructions for safe limit levels
  (E) Where necessary, details of configurations in which the equipment is and is not to be used

1003. Design requirements

Oil mist detection arrangements are to be designed and fitted in accordance with the following requirements.

(1) The oil mist detection arrangements are to be installed in accordance with the engine designer's and oil mist manufacturer's instructions and recommendations. Items and contents to be included in the instructions and recommendations are to comply with the requirements in **Pt 5, Ch 2, 203. 10** of the Guidance relating to the Rules.
(2) Alarms and shutdowns for the oil mist detection arrangements and the system arrangements are to be in accordance with the requirements in **Pt 9, Ch 3, Sec 3.**
(3) Where sequential oil mist detection arrangements are provided the sampling frequency and time is to be as short as reasonably practicable.
(4) The oil mist detection arrangements are to provide an indication that any lenses fitted in the equipment and used in determination of the oil mist level have been partially obscured to a degree that will affect the reliability of the information and alarm indication.
(5) The oil mist detection arrangements are to provide a alarm indication in the event of a foreseeable functional failure in the equipment and installation arrangements.
(6) Where oil mist detection equipment includes the use of programmable electronic systems, the arrangements are to be in accordance with the requirements in **Pt 9, Ch 3, 302.**
(7) Oil mist detection arrangements are to be capable of being tested on the test bed and onboard under engine at standstill and engine running at normal operating conditions.

1004. Type tests

1. Approval tests are to comply with the requirements given in **Table 3.10.1.**

2. Test report

The test house is to provide a full report that includes the following information and documents:

(1) Test specification.
(2) Details of devices tested.
(3) Results of tests
  To include a declaration by the manufacturer of the oil mist detector of its:
  (A) Performance (mg/L)
  (B) Accuracy, of oil mist concentration in air
  (C) Precision, of oil mist concentration in air
  (D) Range, of oil mist detector
  (E) Resolution, of oil mist detector

(F) Response time, of oil mist detector
(G) Sensitivity, of oil mist detector
(H) Obscuration of sensor detection, declared as percentage of obscuration. (0% totally clean, 100% totally obscure)
(I) Detector failure alarm

Table 3.10.1 Type tests of crankcase oil mist detection and alarm equipment

Kinds	Requirements
Test facilities	(1) A full range of facilities for carrying out the environmental and functionality tests required by this Section shall be available and be acceptable to the Society. (2) The test house that verifies the functionality of the equipment is to be equipped so that it can control, measure and record oil mist concentration levels in terms of mg/L to an accuracy of ± 10%. (3) When verifying the functionality, test houses are to consider the possible hazards associated with the generation of the oil mist required and take adequate precautions. It will be accepted the use of low toxicity, low hazard oils as used in other applications, provided it is demonstrated to have similar properties to SAE 40 monograde mineral oil specified.
Environmental tests	(1) Panel of the oil mist detection arrangement is to be type tested in accordance with **Table 3.23.1** of **Ch 3, Sec. 23** of the Guidance. However the test items are to be electrical power supply failure test, power supply variation test, dry heat test, damp heat test, vibration test, EMC test, insulation resistance test, high voltage test and, static and dynamic inclinations (if moving parts are contained). (2) Detectors are to be type tested in accordance with **Table 3.23.1** of **Ch 3, Sec 23** of the Guidance. However the test items are to be electrical power supply failure test, power supply variation test, dry heat test, damp heat test, vibration test, EMC test where susceptible, insulation resistance test, high voltage test and, static and dynamic inclinations.
Functional tests	(1) All tests to verify the functionality of crankcase oil mist detection and alarm equipment are to be carried out in accordance with from (2) to (6) with an oil mist concentration in air, known in terms of mg/L to an accuracy of ± 10%. (2) The concentration of oil mist in the test vessel is to be measured in the top and bottom of the vessel and is not to differ by more than 10 %. (3) The oil mist detection arrangements are to be capable of detecting oil mist in air concentrations of followings. (A) between 0 and 10% of the lower explosive limit (LEL) or (B) between 0 and a percentage of weight of oil in air determined by the Manufacturer based on the sensor measurement method (e.g. obscuration or light scattering) that is acceptable to the Society taking into account the alarm level specified in (3). The LEL corresponds to an oil mist concentration of approximately 50 mg/L (13 % concentration of oil in air mixture, 4.1% weight of oil in air mixture). Refer to **Fig 3.10.1.** 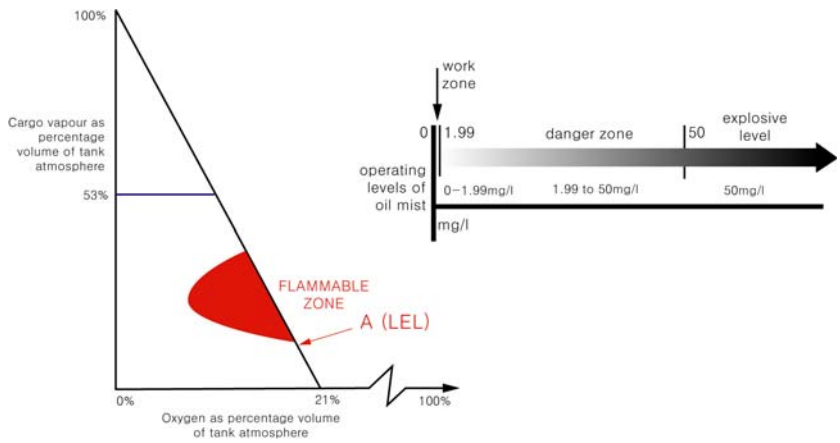 **Fig 3.10.1 Explosion curve of oil-air mixture and operating levels of oil mist**

Table 3.10.1 Type tests of crankcase oil mist detection and alarm equipment (continued)

Kinds	Requirements
Functional tests	(4) The alarm set point for oil mist concentration in air is to provide an alarm at a maximum level corresponding to not more than 5 % of the LEL or approximately 2.5 mg/L. (5) Where alarm set points can be altered, the means of adjustment and indication of set points are to be verified against the equipment manufacturer's instructions. (6) The performance of the oil mist detector in mg/L is to be demonstrated. This is to include the range, resolution, sensitivity. (7) Where oil mist is drawn into a detector via piping arrangements, the time delay between the sample leaving the crankcase and operation of the alarm is to be determined for the longest and shortest lengths of pipes recommended by the manufacturer. The pipe arrangements are to be in accordance with the manufacturer's instructions/recommendations. Piping is to be arranged to prevent pooling of oil condensate which may cause a blockage of the sampling pipe over time. (8) It is to be demonstrated that the openings of detector equipment does not become occluded or blocked under continuous splash and spray of engine lubricating oil, as may occur in the crankcase atmosphere. Testing is to be in accordance with arrangements proposed by the manufacturer and agreed by the Society. The temperature, quantity and angle of impact of the oil to be used is to be declared and their selection justified by the manufacturer. (9) Detector equipment may be exposed to water vapour from the crankcase atmosphere which may affect the sensitivity of the equipment and it is to be demonstrated that exposure to such conditions will not affect the functional operation of the detector equipment. Where exposure to water vapour and/or water condensation has been identified as a possible source of equipment malfunctioning, testing is to demonstrate that any mitigating arrangements such as heating are effective. Testing is to be in accordance with arrangements proposed by the manufacturer and agreed by the Society. (10) It is to be demonstrated that an indication is given where lenses fitted in the equipment and used in determination of the oil mist level have been partially obscured to a degree that will affect the reliability of the information and alarm indication.
Detectors and alarm equipment to be tested	(1) The detectors and alarm equipment selected for the type testing are to be selected from the manufacturer's normal production line in the presence of Surveyor. (2) Two detectors are to be tested. One is to be tested in clean condition and the other in a condition representing the maximum level of lens obscuration specified by the manufacturer.
Test method	(1) The ambient temperature in and around the test chamber is to be at 25 ± 10℃. (2) Oil mist is to be generated with suitable equipment using an SAE 40 monograde mineral oil or equivalent and supplied to a test chamber. The selection of the oil to be used is to take into consideration risks to health and safety, and the appropriate controls implemented. A low toxicity, low flammability oil of similar viscosity may be used as an alternative. The oil mist produced is to have an average (or arithmetic mean) droplet size not exceeding 5μm. The oil droplet size is to be checked using the sedimentation method or an equivalent method to a relevant international or national standard. If the sedimentation method is chosen, the test chamber is to have a minimum height of 1m and volume of not less than 1m^3. (3) The oil mist concentrations used are to be ascertained by the gravimetric deterministic method or equivalent. Where an alternative technique is used its equivalence is to be demonstrated. (For this test, the gravimetric deterministic method is a process where the difference in weight of a 0.8μm pore size membrane filter is ascertained from weighing the filter before and after drawing 1L of oil mist through the filter from the oil mist test chamber. The oil mist chamber is to be fitted with a recirculating fan.) (4) Samples of oil mist are to be taken at regular intervals and the results plotted against the oil mist detector output. The oil mist detector is to be located adjacent to where the oil mist samples are drawn off. (5) The results of a gravimetric analysis are considered invalid and are to be rejected if the resultant calibration curve has an increasing gradient with respect to the oil mist detection reading. This situation occurs when insufficient time has been allowed for the oil mist to become homogeneous. Single results that are more than 10% below the calibration curve are to be rejected. This situation occurs when the integrity of the filter unit has been compromised and not all of the oil is collected on the filter paper.

Table 3.10.1 Type tests of crankcase oil mist detection and alarm equipment (continued)

Kinds	Requirements
Test method	(6) The filters require to be weighed to a precision of 0.1mg and the volume of air/oil mist sampled to 10mL. (7) Oil mist detection equipment is to be tested in the orientation (vertical, horizontal or inclined) in which it is intended to be installed on an engine or gear case as specified by the equipment manufacturer. (8) Where sensitivity levels can be adjusted, testing is to be carried out at the extreme and mid-point level settings.

Section 11 Exhaust Gas Turbochargers

1101. Application

The requirements in this Section, in principle, apply to the Type Approval of exhaust gas turbo-chargers (hereinafter referred to as the turbo-chargers in this Section) manufactured at the same manufacturing plant by mass production methods. Turbo-chargers are to be type approved, either separately or as a part of an engine. The requirements are written for exhaust gas driven turbo-chargers, but apply in principle also for engine driven chargers.

1102. Data to be submitted

The data in **Pt 5, Ch 1, 211.** are to be submitted to the Society in addition to those specified in **102.** *(2017)*

1103. Type tests

Type tests are to be carried out for Categories B and C. The type test for a generic range of turbo-chargers may be carried out either on an engine (for which the turbo-charger is foreseen) or in a test rig.

1. Turbo-chargers are to be subjected to at least 500 load cycles at the limits of operation. This test may be waived if the turbo-charger together with the engine is subjected to this kind of low cycle testing. The suitability of the turbo-charger for such kind of operation is to be preliminarily stated by the manufacturer. The rotor vibration characteristics shall be measured and recorded in order to identify possible sub-synchronous vibrations and resonances.

2. The type test shall be completed by a hot running test at maximum permissible speed combined with maximum permissible temperature for at least one hour. After this test, the turbocharger shall be opened for examination, with focus on possible rubbing and the bearing conditions.

Section 12 Hydraulic Motors and Hydraulic Pumps

1201. Application

1. Where the manufacturer obtained the Approval of Quality Assurance System specified in **Ch 5** of the Guidance apply to the Type Approval of individual units of hydraulic pumps and hydraulic motors intended to be used for steering gear, windlass, cargo winch and other deck machinery, opening/closing appliance of watertight door, side thruster and other auxiliaries for essential use, manufactured at the same manufacturing plant by mass production methods, in principle, the Society apply to the requirements of this Section for the tests and inspection of them.
2. Hydraulic motors and hydraulic pumps in this Section mean those in the types of gear, screw, vane and piston.

1202. Type tests

1. The type tests are to be carried out on the hydraulic motors and hydraulic pumps random selected one for each type from the production line.
2. The items of the type tests are to be, in principle, as follows:
   (1) Construction instruction
   (2) Pressure test
   (3) Operational performance test
      (A) Performance test
      (B) Continuous running test
      (C) Vibration test
      (D) Temperature rise test
      (E) Relief valve test
   (4) Overhaul inspection of major components after operational performance tests
      (A) Gear type and screw type
         Casing, cover, gear, screw, shaft, bearing and relief valve
      (B) Vane type
         Casing, cover, vane, rotor, bush, cam ring, driving shaft and relief valve
      (C) Axial piston type
         Driving shaft, bearing piston, rod, cylinder block, valve plate, cam plate, pump casing, bearing casing, cover, flexible shaft coupling, controller and servo system
      (D) Radial piston type
         Driving shaft, crankshaft, bearing, piston, rod, side guide, cam curve, pump casting, slide block, cylinder casting, cover, relief valve and servo system
   (5) Other test required by the Society
3. Representative type of hydraulic pumps and hydraulic motors intended to be used for steering gear is to be performed continuous running test for 100 hours. Testing methods are to comply with the requirements specified in **Pt 5, Ch 7, 501. 3** of the Rules.

1203. Tests of individual Hydraulic Motors and Hydraulic Pumps after approval

Construction instruction, pressure test and performance test of safety devices during operation are to be carried out. In case where noise and/or vibration which is required to be ascertained is occurred, overhaul inspection may be requested by the Society.

Section 13 Air Compressors

1301. Application

1. Where the manufacturer obtained the Approval of Quality Assurance System specified in **Ch 5** of the Guidance apply to the Type Approval of air compressors manufactured at the same manufacturing plant by mass production methods, in principle, the Society apply to the requirements of this Section for the tests and inspection of air compressors.

2. The air compressors to which the requirements of this Section apply are those used for the starting of diesel engines, controls of machinery and equipment, power sources and general service, and are of the piston type or vane type.

1302. Type tests

1. The type tests are to be carried out on the air compressors random selected one for each type from the production line.

2. The items of the type test are to be, in general, as follows:
   (1) Construction instruction
   (2) Leakage test and pressure test
   (3) Operational performance test
      (A) Continuous running test (for one hour)
      (B) Performance test
      (C) Operational test of safety devices
   (4) Overhaul inspection of major components after operational tests
      Cylinder head, cylinder, piston, piston pin, connecting rod, crankshaft, bearing (small end and big end bearing, main bearing), crankcase, suction valve, discharge valve, intercooler, after cooler, attached pump (lubricating oil and cooling water), outlet non-return valve and relief valve
   (5) Other tests required by the Society

1303. Tests of individual Air Compressors after approval

Construction instruction, pressure test and performance test of safety devices during operation are to be carried out. In case where noise and/or vibration which is required to be ascertained is occurred, overhaul inspection may be requested by the Society.

Section 14 Safety Valves

1401. Application

The requirements in this Section apply to tests and inspection for the type approval according to the following:

(1) The approval of the coefficient K in the calculation formula of the discharge capacity of safety valves of boilers (excluding the ordinary type valves, hereinafter the same in this Section) based on **Pt 5, Ch 5, 123.** of the Rules.

(2) The approval of the blow-off coefficient K in the calculation formula of the blow-off rate of pressure relief valves of the cargo containment system and process pressure vessels according to **Pt 7, Ch 5, 804. 1** of the Rules.

1402. Data to be submitted

The sectional assembly drawings of the safety valve are to be submitted to the Society in addition to those specified in **102.**

1403. Type tests

1. Test

(1) The test is to be carried out according to one of the following (a), (b) and (c). The test fluid is to be steam, air or gas having known property and the fluid at back pressure side is to be atmosphere.

(A) Test A: For the same design series (e.g., the group having serial nominal diameter to the nominal pressure), the 3 representative nominal diameters are chosen and tested by 3 different pressure. The 9 actual blow-off rates are measured and the blow-off coefficient (K) is determined.

(B) Test B: For the same design series, the 4 representative nominal diameters are chosen and tested by different pressure respectively. The actual blow-off rate is measured and the blow-off coefficient (K) is determined.

(C) Test C: For the same design series, the 3 representative nominal diameters are chosen and tested by same pressure. The actual blow-off rate is measured and the blow-off coefficient (K) is determined.

(2) Gauges and measuring procedures are to be in accordance with the requirements given in **Table 3.14.1**

Table 3.14.1 Gauges and measuring procedures

measuring item	measuring procedures
Atmospheric pressure	Atmospheric pressure is to be measured by the gauge with error range of 33.3 Pa or less.
Temperature	Temperature is to be measured by the calibrated thermocouples or resistance thermometer in the inside of pipes or thermometer case with attention to thermal conduction and radiation.
Pressure	The static pressure not more than 0.1 MPa is to be measured by manometer, and the static pressure over 0.1 MPa or differential pressure is to be measured by a calibrated Bourdon pressure gauge.
Flow rate	The orifice or nozzle according to national standard, etc., is to be used to measure flow rate, and the choking diameter ratio of orifice to pipe is to be not more than 0.7. The differential pressure between before and after orifice is to be 100 ~ 2,500 mm H_2O, and the test is to be carried out in a steady flow condition (for fluctuation over 2 %, the cause is to be checked and calibrated).
Head	The head is to be measured by calibrated 0.01 mm level dial gauge, and the head limiting device is to be attached at the valve stem to prevent exceeding design head.
Steam condition	(a) The temperature, pressure and humidity of steam in the safety valve inlet and atmospheric pressure are to be measured. (b) The humidity of steam is to be measured by well-insulated reducing type calorimeter and thermometer after reducing pressure. However, the measurement is not to be applied to steam having more than 10 % humidity. And the superheating of superheated steam at outlet of calorimeter may be 4.5 °C or over.

Table 3.14.1 Gauges and measuring procedures (continued)

measuring item	measuring procedures
Steam condition	(c) The humidity of steam is to be obtained from $h-s$ diagram or the enthalpy obtained from the following formula according to the steam table. Humidity (%) = 100 - x where, x : Dryness(%), $x = (h_x - h_1{}') / h_{1r} \times 100$ h_x : Enthalpy of superheated steam at atmosphere and steam temperature measured by choking type calorimeter (kcal/kg) $h_1{}'$: Enthalpy of saturated water at steam pressure measured at inlet of choking type calorimeter (kcal/kg) h_{1r} : Evaporation heat at steam pressure measured at inlet of choking type calorimeter (kcal/kg) (d) The temperature measured by choking type calorimeter is not to have a difference of 0.5 °C or over at normal condition.
Air condition	The air temperature and pressure at safety valve inlet are to be measured, and the air is to be free from dust and oil.
Gas condition	The measurement of gas condition having known property is to be carried out according to the air condition measurement above.

(3) Test procedures by steam is to be in accordance with the requirements given in **Table 3.14.2**

Table 3.14.2 Test procedure by steam

measuring item	measuring procedures
Test apparatus	(a) Test apparatus is to be able to warm up insulated parts of the apparatus and pipes sufficiently and provided with a drain valve in its lowest part. (b) Test apparatus is to be provided with a pressure gauge, a thermometer and a head measuring device at safety valve inlet. When using saturated steam, reducing type calorimeter is to be fitted for steam humidity measurement.
Test preparation	Before the test, the drainage in test apparatus is to be fully discharged.
Test of valve	(a) The pressure at safety valve inlet is to be maintained to the pressure for decision of blow-off rate until each gauge being steady state. (b) The pressure at valve inlet, indicating value of flow meter, head of valve and steam temperature and humidity are to be measured when each gauge is in a steady state.

(4) Test procedures by air is to be in accordance with the requirements given in **Table 3.14.3**

Table 3.14.3 Test procedure by air

measuring item	measuring procedures
Test apparatus	(a) A drain valve is to be fitted in the lowest part of the apparatus or pipes and is to be observed for occurrence of frost in the test. (b) Pressure gauge and thermometer for measurement of air at safety valve inlet and head measuring apparatus are to be fitted.
Test preparation	Before the test, the drainage in test apparatus is to be fully discharged.
Test of valve	(a) Pressure at the safety valve inlet is to be maintained to the pressure for determination of blow-off rate until each gauge is in a steady state. (b) The pressure and temperature at the valve inlet, indicating value of flow meter and head of valve are to be measured when each gauge is in a steady state.

(5) Determination of blow-off rate and nominal blow-off coefficient (K)

(A) The condition for determination of blow-off coefficient

(a) The measured value, in order to evaluate blow-off coefficient (K), is to be compensated for gauge error, and not to be much fluctuation.

(b) In case test fluid is humid saturated steam, the measured value is to be compensated for humidity.

(c) The test pressure and nominal diameter of test valve refered to (1) (B) (a) and (b) is to be selected in large range as practicable.

(d) Each blow-off coefficient (K') obtained from measurement of actual blow-off rate is to be within a range of ± 5 % of their average value.

(e) The measurement of actual blow-off rate is, in principle, to be carried out one time in 1 test condition, and if there is any doubt about the measured value, measurement may be added 2 times in same condition. The measured value K in this case is to be used for the evaluation of (d) above. However, if (d) above is not satisfied, the corrected safety valve or substitute of the same design condition may be tested additionally.

(f) The standard deviation of actual blow-off rate obtained from (B) (a) above is to be not more than 2.5 %.

(B) Determination of blow-off rate and blow-off coefficient

(a) Determination of blow-off rate by reducing apparatus

(i) The measurement of blow-off rate by reducing apparatus is to be in accordance with (2) above, and in principle, to be calculated by the following formula, and may be determined by other national standard.

$$Q_{ma} = \alpha \frac{\pi}{4} d^2 \sqrt{2 \Delta p \rho_0} \times 3600$$

where,

Q_{ma} : Flow rate at orifice inlet(kg/h)

α : Flow rate coefficient

d : Reduced hole diameter in operation state (m)

$\triangle p$: Pressure difference between before and after orifice (Pa)

ρ_0 : Fluid density at orifice inlet ($\mathrm{kg/m^3}$), for air, $\rho_0 = 1.318 \times (273/t) \times p_0 \times 10^{-5}$

T : Absolute temperature of fluid at orifice inlet (K)

p_0 : Absolute pressure of fluid at orifice inlet (Pa)

(ii) The calculated flow rate is to be considered for standard deviation which may be obtained according to the requirement of 3.6 of *KS A* 0612 or equivalent.

(b) Theoretical blow-off rate formula

Theoretical blow-off rate is to be determined by the following formula (i) or (ii).

(i) Case of calculation with assumption that ideal gas having frictionless flow in safety valve, flow coefficient of 1.0 and constant specific heat having isentropic process is blow-off.

$$Q_{mt} = A \sqrt{\frac{2k}{k-1} \frac{p_1}{v_1} \left\{ \left(\frac{p_2}{p_1} \right)^{2/k} - \left(\frac{p_2}{p_1} \right)^{(k+1)/k} \right\}} \times 3.6 \times 10^{-3}$$

However, in case of $p_2 \le p_1 \left\{ \frac{2}{k+1} \right\}^{k/(k-1)}$

$$Q_{mt} = A \sqrt{k \left(\frac{2}{k+1} \right)^{(k+1)/(k-1)}} \times \frac{p_1}{\sqrt{RT_1}} \times 3.6 \times 10^{-3}$$

where,

Q_{mt}: Theoretical blow-off rate (kg/h)

A : Actual blow-off area of test valve (mm^2)

k : Adiabatic exponent of fluid at valve inlet, for air, k may be 1.40.

p_1 : Absolute pressure at valve inlet (Pa)

p_2 : Absolute pressure at valve outlet (Pa)

v_1 : Specific volume of fluid at valve inlet (m^3/kg)

R : Gas constant of fluid (J/(kg · K))

T_1 : Absolute temperature at valve inlet (K)

(ii) Case of absolute pressure at valve outlet not much more than critical absolute pressure at valve inlet for steam or gas

(steam) $Q_{mt} = 0.5145 \times A_1(10.2p+1) \times C$

where,

Q_{mt} : Molecular weight of gas (kg/h)

A_1 : Actual blow-off area of test valve (mm^2)

p : Steam pressure at valve inlet (MPa gauge)

C : Factor depending on steam property according to the requirement of **4.2.2** of **KS B 6352**

(gas) $Q_{mt} = A_2(10.2p+1)\sqrt{\frac{M}{ZT}} \times C'$

where,

M : Molecular weight of gas

A_2 : Actual blow-off area of test valve(mm^2)

Z : Compression coefficient according to the requirement of **4.2.2** of **KS B 6352**, for air, Z = 1

T : Absolute temperature of gas (K)

C': Factor depending on vapor property according to the requirement of **4.2.2** of **KS B 6352**

(c) Calculation of blow-off coefficient and nominal blow-off coefficient

(i) Determination of blow-off coefficient (K') by measurement of actual blow-off rate

$$K' = \frac{Q_{ma}}{Q_{mt}}$$

where,

Q_{ma} : Actual blow-off rate (kg/h)

Q_{mt} : Theoretical blow-off rate (kg/h)

(ii) Determination of nominal blow-off coefficient (K)

When blow-off coefficient obtained from (i) above satisfy the requirement of (5) (A) (d) above, the arithmetic mean value is to be the nominal blow-off coefficient of each safety valve.

$$K = \sum_{l}^{n} K'/n$$

where,

n : Number of trial

(6) Calculation of nominal blow-off rate

(A) Calculation of nominal blow-off rate (Q_m)

$$Q_m = Q_{mt} \times 0.9K$$

(B) Conversion of blow-off rate of gas having known property

The conversion may be in accordance with the following when applying pressure is not less than measured pressure.

(a) Case of conversion from value for steam

$$Q_{mg} = \frac{Q_{ms}}{0.5145C \cdot p_s} \cdot C'p_G\sqrt{\frac{M_G}{Z_G T_G}}$$

(b) Case of conversion from value for air or gas having known property

$$Q_{m2} = \frac{Q_{m1}}{C'_1 p_1\sqrt{\frac{M_1}{Z_1 T_1}}} \cdot C'_2 p_2\sqrt{\frac{M_2}{Z_2 T_2}}$$

where,

Q_m : Actual blow-off rate (kg/h)

p : Absolute pressure of fluid at valve inlet (MPa)

G : Gas

s : Steam

1 : Air or gas having known property measured blow-off rate

2 : Gas having known property in order to convert blow-off rate

Section 15 Machinery and Equipment for Ships

1501. Application

1. The requirements of this Section apply to tests and inspection for the approval of the machinery and equipment listed below for which approval of the Society is to be obtained in advance before being fitted in ships.

(1) Flexible couplings (**Pt 5, Ch 3, 406. 2** of the Rules)
(2) Kind 1 propeller shafts with corrosion resisting (**Pt 5, Ch 1, 102. 3** of the Rules)
(3) Stern tube bearings (**Pt 5, Ch 3, 206. 1** of the Rules)
(4) Stern tube sealing devices (**Pt 5, Ch 3, 206. 2** of the Rules)
(5) Pipes of special materials **(Pt 5, Ch 6, 102. 5. (1)** of the Rules except for plastic pipes)
(6) Piping systems for ships carrying liquefied gases in bulk (**Pt 7, Ch 5, 513.** of the Rules)
(7) Others as deemed necessary by the Society

2. The (C) Expansion pipe of Cargo pipings, pumps and cargo hoses of ships carrying liquefied gases in bulk in **Table 3.15.1** apply to the tests and inspection for the approval of expansion pipes of metallic or non-metallic materials in accordance with the requirements in **Pt 5, Ch 6, 102. 5 (2)** of the Rules. *(2017)*

1502. Data to be submitted

The following reference data are to be submitted to the Society in addition to those specified in **102.**

(1) Technical information on the machinery and equipment (work procedure manual, etc.)
(2) Test records (when preliminary test is carried out)

1503. Type tests

1. General

The tests specified in the relevant provisions of the Rules and their Guidance relating to the machinery and equipment, and additionally, the detailed tests peculiar to the machinery and equipment as prescribed in **Par 2** are to be carried out.

2. Details of Tests

In the type test program, the test items specified in **Table 3.15.1** as applicable to the machinery and equipment concerned and additionally those deemed necessary by the Society are to be included.

Table 3.15.1 Type test item of machinery and equipment of ship

Kinds	Type test item
flexible couplings	In the type tests of flexible couplings, the following items (a) through (e) are to be included. For systems intended to control a deflection as well as a torsion, the tests in (a) through (e) are to be carried out under the condition of imposing the maximum allowable deflection. (a) Test to confirm the allowable mean torque (b) Test to confirm the maximum allowable transient torque (c) Test to confirm the allowable alternating torque (imposing the mean torque) (d) Test to confirm the value of torsional rigidity (e) Other tests as deemed necessary by the Society due to the own construction
Kind 1 propeller shafts with corrosion resisting	(A) In the type tests for kind 1 propeller shafts with rubber sleeve, following items are to be included. (a) The following physical tests by the method indicated in **KS M 6518.** In these tests, test specimens are to be vulcanized under the condition shown in "Work Procedure Manual" for the maximum diameter of propeller shaft for which an approval will be given. (i) Tensile test (including elongation test) (ii) Hardness test (iii) Tear test (iv) Test for static modulus of elasticity (v) Aging tests relating to items (i) through (iv) (vi) Dipping test (vii) Adhesion test (bonded parts between rubber, ebonite, shaft and sleeve) (b) Peeling test by the method indicated in **KS M 6518.** In this case, the test shaft is to be of a model shaft with the maximum diameter worked up in accordance with the "Work Procedure Manual".

Table 3.15.1 Type test item of machinery and equipment of ship (continued)

Kinds	Type test item
Kind 1 propeller shafts with corrosion resisting	(c) Following items are to be included in the "Work Procedure Manual" referred to in the preceding items (a) and (b) and **1502.** (1). (i) The shape of the copper alloy sleeve on which rubber sleeve is bound. (ii) Work details including the materials used, construction, dimensions, vulcanizing conditions (temperature, pressure and time interval) of the portion of rubber sleeve. (iii) The procedure of permanent marking on the product (serial No., date of manufacture, name of company who carried out the work, the Society's approval No., material of the mark tag, size, etc.)
	(B) In the type tests of kind 1 propeller shafts with synthetic resin sleeve, following items are to be included. (a) Watertightness verification test with the test shaft worked up in accordance with the "Work Procedure Manual" This test is to be carried out as the endurance test of the watertightness at the portion between synthetic resin sleeve and copper alloy sleeve under repeated twisting and bending loads. In this case, the construction drawing of the test shaft and the drawing of the test rig are to be indicated in the type test program. (b) Adhesion test correspondingly in accordance with **KS M 6518** (adhesion between the bonded areas of synthetic resin, shaft and sleeve) (c) Water absorption rate test at the portion of synthetic resins is to be as deemed appropriate by the Society. (d) Falling ball impact test at the portion of synthetic resins correspondingly in accordance with **KS M 3074** (e) Real ship tests The shafts which have passed the type tests, are to be subjected to real ship tests. In ships having a post-installing period of two years, the condition of coatings is to be confirmed in the presence of the Surveyor. (f) Following items are to be included in the “Work Procedure Manual” referred to the preceding (a) and **1502.** (1). (i) Environmental conditions involved in the work (ii) Environment control system relating to temperature, humidity, sanitation, etc. (iii) Work procedure of the shape at the portion of the copper alloy sleeve where synthetic resin sleeve is bound (iv) Work details including the materials, construction, dimensions, etc. at the portion of synthetic resin sleeve (v) The procedure of permanent marking on the product (serial No., date of manufacture, name of company who carried out the work, the Society's approval No., material of the mark tag, size, etc.)
	(C) Type tests of kind 1 propeller shafts with other materials are to be as deemed appropriate by the Society.
Stern tube bearings	(A) Confirmation tests for the characteristics of materials (a) In the case of vulcanized rubber, the following tests specified in **KS M 6518** (i) Tensile test (ii) Hardness test (iii) Tension set test (iv) Adhesion test (v) Test for adhesion to metals (except those not to be adhered to metals) (vi) Tear test (vii) Compression set test (viii) Dipping test (in the case of a water-lubricated system, tests are to be carried out using sea water) (ix) Aging test (b) In the case of materials other than those specified above in (a), tests according to pertient national standards or other equivalent standards concerning the contents of (a) according to the materials. (B) Abrasion test (C) Seizure critical load test (D) Running test (In this case, confirm that the bearing pressures during the tests are to be verified are not less than 0.8 MPa for an oil-lubricated system, and are not less than 0.2 MPa for a water-lubricated system respectively.) (E) "Type test program" submitted according to **102. 3** (1) (A) is to include the following items: (a) Drawing of the test rig (b) Drawing of the product (specified the materials, dimensions, etc.) (c) Condition of tests (lubrication system, shaft speed, bearing load, hydraulic pressure, test time, etc.)

Table 3.15.1 Type test item of machinery and equipment of ship (continued)

Kinds	Type test item
Stern tube sealing devices	(A) "Type test program" submitted according to **102. 3** (1) (A) is to include the following items: (a) Drawings of the test rig (b) Drawings of test product specifying the construction, materials, dimensions, etc. (c) Plans of test conditions specifying the lubrication system, shaft speed range, surface pressure of the bearing, hydraulic pressure, test hours, etc. (B) In principle, the duration of performance tests is to be not less than 1,000 hours. The temperature (keep up 55°C and less), quantity of leakage (or consumption) per hour and pressure, etc. are to be checked in accordance with 'Type test program' during the tests. Dismantle after the tests and inspect the dimensions, wear and corrosion, etc. The consumption of lubricating oil per day is to be 2 l and less for the oil-lubricated system.
Pipes of special materials	In the type tests for pipes of special materials, the following items are to be included according to their applications and kinds of materials as deemed necessary by the Society: (A) Tests specified in **KS M 6540** (Testing Methods for Rubber Hoses), **ISO 1436** & **3862** (Rubber hoses and hose assemblies wire-reinforced hydraulic type), etc. (B) Flame-resistant test This test applies to piping system containing fuel oil, lubricating oil, hydraulic oil and sea water where leakage or failure could result in fire or flooding in the machinery space. The testing procedures are to be as follows: The test pipe at the design pressure (in the case of less than 0.5 MPa, 0.5 MPa is to be taken) and the design temperature (the temperature at outlet, in the case of less than 80°C, 80°C is to be taken) with fluid flowing through is to be exposed to a flame on the surface and held at a temperature of 800°C for a period of 30 minutes. Following the fire test, a pressure test is to be carried out at a pressure twice the design pressure (in the case of less than 1 MPa, 1 MPa is to be taken), whereby it is to be verified that the test pipe is free from abnormality. (C) For rubber hoses used for the contact freezer, the tests specified in the following (a) and (b): (a) Pressure test at a pressure twice the design pressure or 2 MPa, whichever is the greater (b) Rupture test at a pressure of 8 MPa or more
Cargo pipings, pumps and cargo hoses of ships carrying liquefied gases in bulk	Type tests specified in **Pt 7, Ch 5, 503.** and **507.** are to be carried out in accordance with following requirements. Type tests of other systems and equipment which the Society deems necessary are to be considered by the Society in each case. (A) **Valve** : The following type tests are to be performed on each size and type of valve.(Refer to SIGTTO Publication on "The Selection and Testing of Valves for LNG Applications") (a) Each size and type of valve shall be subjected to seat tightness testing consisting of cryogenic testing over the full range of operating pressures for bi-directional flow and temperatures, at intervals, up to 1.1 times the rated design pressure of the valve. Allowable leakage rates shall be to the requirements of the Society. During the testing, satisfactory operation of the valve shall be verified. (b) The flow or capacity shall be certified to a recognized standard for each size and type of valve. (c) Pressurized components shall be pressure tested to at least 1.5 times the rated pressure. (d) For emergency shutdown valves, with materials having melting temperatures lower than 925 ℃, the type testing shall include a fire test to a standard acceptable to the Society. (B) **PRV(Pressure Relief Valve)** : PRVs shall be type tested. Type tests shall be include: (a) Verification of relieving capacity (b) Cryogenic testing when operating at design temperatures colder than -55 ℃(Including operation testing for safety valve set pressure and leakage verification at design temperature) (c) Seat tightness testing (d) Pressure containing parts are pressure tested to at least 1.5 times the design pressure. PRVs shall be tested in accordance with recognized standards.(ISO 21013-1 and ISO 4126-1) (C) **Expansion pipe** : The following type tests are to be performed on each type of expansion bellows. *(2017)* (a) A type element of the bellows, not pre-compressed, shall be pressure tested at not less than 5 times the design pressure without bursting. The duration of the test should not be less than 5 min. (b) A pressure test shall be performed on a type complete expansion pipe with all the accessories such as flanges, stays and articulations, at the minimum design temperature and twice the design pressure at the extreme displacement conditions recommended by the manufacturer without permanent deformation. (c) A cyclic test (thermal movements) shall be performed on a complete expansion pipe, which shall withstand at least as many cycles, under the conditions of pressure, temperature, axial movement, rotational movement and transverse movement, as it will encounter in actual service. Testing at ambient temperature is permitted, when this testing is at least as severe as testing at the service temperature. (d) A cyclic fatigue test (ship deformation) shall be performed on a complete expansion pipe, without internal pressure, by simulating the bellows movement corresponding to a compensated pipe length, for at least 2,000,000 cycles at a frequency not higher than 5 cycles/s . This test is only required when, due to the piping arrangement, ship deformation loads are actually experienced.

Table 3.15.1 Type test item of machinery and equipment of ship (continued)

Kinds	Type test item
Cargo pipings, pumps and cargo hoses of ships carrying liquefied gases in bulk	(D) **Cargo pumps** : The following type tests are to be performed on each size and type of pumps. However, for the pump designed the same as an existing pump approved by the Society and having satisfactory in-service experience, consideration may be given to waiving the tests. (a) hydrostatic test of the pump body equal to 1.5 times the design pressure (b) the capacity tests in compliance with the following (i) For submerged pumps, the capacity test is to be carried out with the design medium or with a medium below the design temperature. (ii) For deep well pumps, the capacity test may be carried out with water. In addition, for deep well pumps, a spin test to demonstrate satisfactory operation of bearing clearances, wear rings and sealing arrangements is to be carried out at the design temperature. (c) After completion of tests, the pump is to be opened out for examination. (E) **Cargo hoses** : Each new type of cargo hose, complete with end-fittings, are to be type tested at a normal ambient temperature. However, for the cargo hose designed the same as an existing cargo hose approved by the Society and having satisfactory in-service experience, consideration may be given to waiving the tests. (a) cycle pressure test of 200 pressure cycles from zero to at least twice the specified maximum working pressure (b) bursting pressure test of at least 5 times its specified maximum working pressure at the extreme service temperature
Gas fuel pipings and pumps for gas fuelled ships	Type tests specified in **Ch 10, 701.** and **702.** of the Guidance for gas fuelled ships are to be carried out in accordance with the type test requirements of cargo pipings and pumps of ships carrying liquefied gases in bulk.
Fuel pipings and pumps for fuel cell systems on board of ships	Type tests specified in **Ch 3, 605., 606.** and **607.** of the Guidance for fuel cell systems on board of ships are to be carried out in accordance with the type test requirements of cargo pipings and pumps of ships carrying liquefied gases in bulk.

3. The Society may request assurance of on-board performance of the machinery and equipment for same specific vessels as a condition of approval.

Section 16 Plastic Piping System

1601. Application *(2017)*

The requirements of this Section apply to tests and inspection for the approval of plastic piping system in accordance with the requirements in **Pt 5, Ch 6, 102. 5** of the Rules and in **Annex 5-6, Pt 5** of the Guidances.

1602. Data to be submitted

The following reference data are to be submitted to the Society in addition to those specified in **102.**

(1) General Information
- (a) Dimensions of plastic piping system *(2017)*
- (b) Maximum internal and external working pressure
- (c) Working temperature range
- (d) Intended services and installation locations
- (e) The level of fire endurance
- (f) Electrically conductive
- (g) Intended fluids
- (h) Limits on flow rates
- (i) Serviceable life
- (j) Installation instructions(Precautions at work site, repair procedures and criteria for determining whether repairs are necessary or not)
- (k) Packing, handling and marking methods
- (l) Storage means of products

(2) Drawings and supporting documentation
- (a) Certificates and reports for relevant tests previously carried out.
- (b) Details of relevant standards.
- (c) All relevant design drawings, catalogues, data sheets, calculations and functional descriptions.
- (d) Fully detailed sectional assembly drawings showing pipe, fittings and pipe connections.

(3) Materials
- (a) The resin type.
- (b) Catalyst and accelerator types, and concentration employed in the case of reinforced polyester resin pipes or hardeners where epoxide resins are employed.
- (c) A statement of all reinforcements employed where the reference number does not identify the mass per unit area or the tex number of a roving used in a filament winding process, these are to be detailed.
- (d) Full information regarding the type of gel-coat or thermoplastic liner employed during construction, as appropriate.
- (e) Cure/post-cure conditions. The cure and post cure temperatures and times employ resin/reinforcement ratio.
- (f) Winding angle and orientation.

(4) Physical properties

Strength of pipes against bending, twisting and strength of bonded section against abrasions by sand, sludge, etc. Data on types of joint, working procedures. In the data, those relating to bending strength and fatigue strength at standard bends and joints are to be included.

1603. Type tests

The requirements in **Table 3.16.1** are, in principle, to be considered as the criteria for the type tests of plastic piping system. For application of the tables, see below: *(2017)*

(1) For those asterisked in the column of criteria, test results shall satisfactory to the manufacturer's reference.

(2) Flame spread, fire endurance, electric conductivity and durability against chemicals test in **Table 3.16.1** are to be carried out, where they are required in the **Annex 5-6, Pt 5** of the Guidances.

(3) For those with maximum working temperature exceeding 80 °C, boiled water absorption rate test in **Table 3.16.1** may additionally be required.

(4) Where testing method other than those given in **Table 3.16.1** is employed, it may be judged as deemed appropriate by the Society in consideration of the equivalency.

Table 3.16.1 Testing methods and Criteria of Plastic piping system

Testing items	Testing method	Criteria
Strength against internal pressure of pipe	Short Term : *ASTM D*1599 Long Term(>100,000 h) : *ASTM D*1598, *D*2992	*
Strength against external pressure of pipe	*ASTM D* 2924	*(collapsed pressure not less than 3bar.)
Strength against impact force	*KS M ISO*9653, *ASTM D*2444	*(After test, test sample should be pass the pressure test at 2.5 times of design pressure for 1 hour.)
Tensile strength	*ASTM D*2105, *D*2290	*
External loading characteristics	*ASTM D*2412	*
Resistance to cyclic internal pressure (Expansion Couplings)_	*ISO* 15306	*
External Pressure Resistance (Expansion Couplings)_	*ASTM D*2924	*
Heat dependence of material	*KS M ISO*75-2 Method A	Minimum heat distortion temperature ≥80℃
Electric conductivity	*ASTM D*257	Surface electrical resistance not more than 0.1 MΩ/m
Flame spread (Fire durability)	*IMO Res. A*753(18) Appendix 3	To have low surface flame spread characteristics not exceeding average values listed in the FTP code, Annex 1, Pt 5
Fire endurance	*IMO Res. A*753(18), Appendix 1, 2	L1 : Fire endurance test (*IMO Res. A*753(18) Appendix 1) in dry conditions, 60 min. L2 : Fire endurance test (*IMO Res. A*753(18) Appendix 1) in dry conditions, 30 min. L3 : Fire endurance test (*IMO Res. A*753(18) Appendix 2) in wet conditions, 30 min.
Aging	*KS M ISO*9142 or manufacturer's Standards(1)	*(The characteristics of the product will not be degraded depending on the environmental conditions.)
Fatigue	*ISO*15306 or Manufacturer's Standards(1)	*(Product shall not be affected by the fatigue fracture at average service pressure)
Water absorption rate	ISO8361(1)	*(The product shall not be degraded by absorbing the intended fluids)
Erosion	Manufacturer's Standards or Service Records(1)	*(The functions of product will not be affected by erosion until 7m/s of design flow rate)
Durability against chemicals	*ASTM C*581(1)	*(The material properties will not be affected by the intended fluids)

Notes
1. Recognized laboratory's test reports, manufacturer's test reports or service records may be accepted instead of type test provided that the Society considers appropriate.

(5) Judgements for acceptance are to be made in accordance with the following procedures and criteria:
(A) Rate of water absorption is to be judged on average values of three test specimens.
(B) For flame spread, judgement is to be made on each of the three test specimens.

(C) For heat dependence of material, the acceptance criteria are to be satisfied by the mean value of the three test specimens or at least that of two test specimens.
(D) For other test items, tests are to be conducted on at least three test specimens where the test result of each test specimen is to satisfy the acceptance criterion.

1604. Marking

The plastic piping system approved by the Society are to be marked with the following. *(2017)*
(1) Type of product or trade name
(2) Mark to prove that the product is approved by the Society.
(3) Nominal pressure, [G] for those with low flame spread characteristics, [D] for those with electric conductivity, material of which pipe or fitting is made
(4) Fire endurance level for those with fire endurance

Section 17 Flexible Hose Assembly

1701. Application

1. The requirements of this Section apply to tests and inspection for the approval of flexible hose assembly of metallic or non-metallic materials in accordance with the requirements in **Pt 5, Ch 6, 102. 5** (2) of the Rules.

2. The requirements of this Section apply to the flexible hose assembly used in oil fuel, lubricating hydraulic and thermal oil systems, fresh water and sea water cooling systems, compressed air systems, bilge and ballast systems, and Class III steam systems in accordance with **Pt 5, Annex 5-9** of the Guidances and may also apply to the flexible hose assembly intended for other uses except for high pressure fuel oil injection systems and fixed extinguishing systems.

1702. Data to be submitted

The following reference data are to be submitted to the Society in addition to those specified in **102.**

(1) Description of design and cross sectional drawings, manufacturer's specification mentioned national or international standard.
(2) Specification of the materials(inner tube, outer tube, couplings etc. mentioned national or international standard).
(3) Welding or brazing procedure specification(only for metallic hose assembly).
(4) Mounting procedure of the couplings to the hoses.
(5) Design pressure(or maximum working pressure).
(6) Temperature range.
(7) Type of medium to be covered.
(8) Special operational limitations.
(9) Marking of the hose assembly.
(10) A detailed information, in case where the flexible hose or fitted coupling is made by different manufacturers.

1703. Type tests

1. Flexible hoses assemblies are subject to satisfactory type testing. Type test programmes for flexible hose assembles are to be submitted by the manufacturer and are to be sufficiently detailed to demonstrate performance in accordance with the specified Standards.

2. For a particular hose type complete with end fittings, the tests, as applicable, are to be carried out on different nominal diameters for pressure, burst, impulse and fire resistance in accordance with the requirements of the relevant Standard. The following Standards are to be used as applicable:

(1) ISO 6802 – Rubber and plastics hoses and hose assemblies with wire reinforcements – Hydraulic impulse test with flexing.
(2) ISO 6803 – Rubber or plastics hoses and hose assemblies – Hydraulic-pressure impulse test without flexing.
(3) ISO 15540 – Fire resistance of hose assemblies – Test methods.
(4) ISO 15541 – Fire resistance of hose assemblies – Requirements for test bench.
(5) ISO 10380 – Pipework – Corrugated metal hoses and hose assemblies.

Other Standards may be accepted where agreed by the Scoeity.

3. All flexible hose assemblies are to be satisfactorily burst tested to an International Standard to demonstrate they are able to withstand a pressure of not less than four times the design pressure without indication of failure or leakage.(The International Standards, e.g., EN or SAE for burst testing of non-metallic hoses, require the pressure to be increased until burst without any holding period at 4 x Maximum Working Pressure.)

1704. Markings

Type approved flexible metal hose assemblies are to be permanently marked by the manufacturer with the following details

(1) Hose manufacturer's name or trademark.
(2) Date of manufacture (month/year).
(3) Designation type reference.
(4) Nominal diameter, Pressure rating, Temperature rating.

1705. Product Inspection after type approval

Flexible hose assembly of metallic or non-metallic materials used for Class I and II pipe fittings is subjected to a hydrostatic test at a pressure 1.5 times of the design pressure.

Section 18 Mechanical Joints

1801. General

The requirements of this Section apply to tests and inspection for the approval of mechanical joints in accordance with the requirements in **Pt 5, Ch 6, 104. 5** (1) of the Rules.

1802. Data to be submitted

The following reference data are to be submitted to the Society in addition to those specified in **102.**

(1) Complete description of the product
(2) Typical sectional drawings with all dimensions necessary for evaluation of joint design
(3) Complete specification of materials used for all components of the assembly
(4) Initial information
  (A) Maximum design pressures (pressure and vacuum)
  (B) Maximum and minimum design temperatures
  (C) Conveyed media
  (D) Intended services
  (E) Maximum axial, lateral and angular deviation, allowed by manufacturer
  (F) Installation details

1803. Type tests

1. Test items

Testing requirements for mechanical joints are to be as indicated in **Table 3.18.1**

Table 3.18.1 Test items for mechanical joints *(2017)*

Test items		Types of mechanical joints			Notes and references
		Compression couplings and pipes unions	Slip-on joints		
			Grip type & Machine grooved type	Slip type	
1	Tightness test	○	○	○	**Table 3.18.2**
2	Vibration (fatigue) test,	○	○	-	**Table 3.18.2**
3	Pressure pulsation test[1)]	○	○	-	**Table 3.18.2**
4	Burst pressure test	○	○	○	**Table 3.18.2**
5	Pull-out test	○	○	-	**Table 3.18.2**
6	Fire endurance test	○	○	○	**Table 3.18.2** (If required in **Pt 5, Ch 6, 104. 5**(5) of the Rules)
7	Vacuum test	○[3)]	○	○	**1304. 7** (for suction lines only)
8	Repeated assembly test	○[2)]	○	-	**Table 3.18.2**

Abbreviations : ○ : test is required.
- : test is not required.

Note
1) for use in those systems where pressure pulsation other than water hammer is expected.
2) except press type.
3) except joints with metal-to-metal tightening surfaces.
4) in the case of bite joint or similar joints.

2. Alternative testing in accordance with national or international standards may be accepted where applicable to the intended use and application.

3. Unless otherwise specified, the water or oil as test fluid is to be used.

4. Selection of test specimen

(1) Test specimens are to be selected from production line or at random from stock.
(2) Where there are various sizes from type of joints requiring approval, minimum of three separate sizes representative of the range, from each type of joints are to be subject to the tests listed in **Table 3.18.1**

5. Mechanical joint assembly

(1) Assembly of mechanical joints should consist of components selected in accordance with preceding **4** (2) and the pipe sizes appropriate to the design of the joints.
(2) Where pipe material would effect the performance of mechanical joints, the selection of joints for testing is to take the pipe material into consideration.
(3) Where not specified, the length of pipes to be connected by means of the joint to be tested is to be at least five times the pipe diameter.
(4) Before assembling the joint, conformity of components to the design requirements is to be verified.
(5) In all cases the assembly of the joint shall be carried out only according to the manufacturer instructions.
(6) No adjustment operations on the joint assembly, other than that specified by the manufacturer, are permitted during the test.

6. Test results acceptance criteria

(1) Where a mechanical joint assembly does not pass all or any part of the tests in **Table 3.18.1**, two assemblies of the same size and type that failed are to be tested.
(2) In this case, only those test which mechanical joint assembly failed in the first instance, are to be repeated. In the event where one of the assemblies fails the second test, that size and type of assembly is to be considered unacceptable.

1804. Methods of tests

1. The outlines of testing methods in **Table 3.18.1** are as given in **Table 3.18.2.**

Table 3.18.2 The outlines of testing methods of mechanical joints

Test item	Kinds	Type test method
1. Tightness test	all mechanical joints	In order to ensure correct assembly and tightness of the joints, all mechanical joints are to be subjected to a tightness test, as follows. (1) Mechanical joint assembly test specimen is to be connected to the pipe or tubing in accordance with the requirements of **1803. 5** (3) and the manufacturers instructions, filled with test fluid and de-aerated. Mechanical joints assemblies intended for use in rigid connections of pipe lengths, are not to be longitudinally restrained. Rigid connections are joints, connecting pipe length without free angular or axial movement. Pressure inside the joint assembly is to be slowly increased to 1.5 times of design pressure. This test pressure is to be retained for a minimum period of 5 minutes. In the event where there is a drop in pressure and there is visual indication of leakage, the test (including fire test) shall be repeated for two test pieces. If during the repeat test one test piece fails, the testing is regarded as having failed. Other alternative tightness test procedure, such as pneumatic test, may be accepted. (2) For compression couplings a static gas pressure test is to be carried out to demonstrate the integrity of the mechanical joints assembly for tightness under the influence of gaseous media. The pressure is to be raised to maximum pressure or 7 MPa which ever is less. (3) Where the tightness test is carried out using gaseous media as permitted in (1) above, then the static pressure test mentioned in (2) above need not be carried out.

Table 3.18.2 The outlines of testing methods of mechanical joints (continued)

Test item	Kinds	Type test method
2. Vibration (fatigue) test	General	(1) In order to establish the capability of the mechanical joint assembly to withstand fatigue, which is likely to occur due to vibrations under service conditions, mechanical joints assembly is to be subject to the following vibration test. (2) Conclusions of the vibration tests should show no leakage or damage, which could subsequently lead to a failure.
	compression couplings, pipe unions	Compression couplings, pipe unions or other similar joints intended for use in rigid connections of pipe are to be tested in accordance with this method described as follows. (A) Two lengths of pipe is to be connected by means of the joint to be tested. (B) One end of the pipe is to be rigidly fixed while the other end is to be fitted to the vibration rig. (C) The test rig and the joint assembly specimen being tested is to be arranged as shown in **Fig 3.18.1** 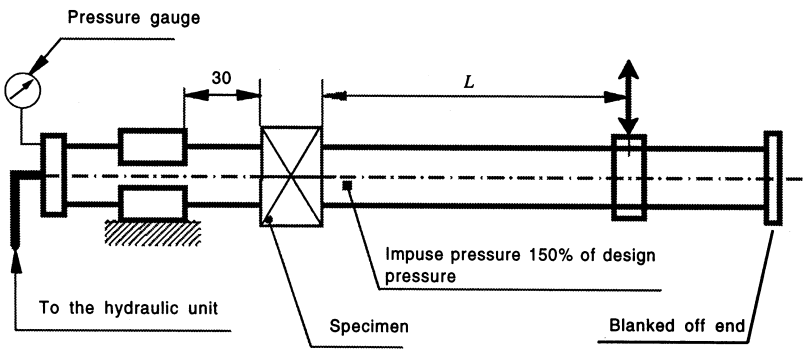 **Fig 3.18.1 Example of equipment for vibration(fatigue) test** (D) The joint assembly is to be filled with test fluid, de-aerated and pressurised to the design pressure of the joint. (E) Pressure during the test is to be monitored. (F) In the event of drop in the pressure and visual signs of leakage the test is to be repeated as described in **1803. 6.** (G) Visual examination of the joint assembly is to be carried out for signs of damage which may eventually lead to joint leakage. (H) Re-tightening may be accepted once during the first 1000 cycles. (I) Vibration amplitude is to be within 5% of the value calculated from the following formula: $A = \frac{2 \times S \times L^2}{3 \times E \times D}$ where: A - single amplitude (mm) L - length of the pipe (mm) S - allowable bending stress in N/mm^2 based on 0.25 of the yield stress E - modulus of elasticity of tube material (for mild steel, E =210 kN/mm^2) D - outside diameter of tube (mm) (J) Test specimen is to withstand not less than 10^7 cycles with frequency 20~50 Hz without leakage or damage.
	Grip type and Machine grooved type joints	Grip type joints and other similar joints containing elastic elements are to be tested in accordance with the following method. A test rig of cantilever type used for testing fatigue strength of components may be used. (A) The test specimen being tested is to be arranged in the test rig as shown in **Fig 3.18.2** (B) Two lengths of pipes are to be connected by means of joint assembly specimen to be tested (C) One end of the pipe is to be rigidly fixed while the other end is to be fitted to the vibrating element on the rig.

Table 3.18.2 The outlines of testing methods of mechanical joints (continued)

<table>
<tr><th>Test item</th><th>Kinds</th><th>Type test method</th></tr>
<tr><td>2. Vibration (fatigue) test</td><td>Grip type and Machine grooved type joints</td><td>
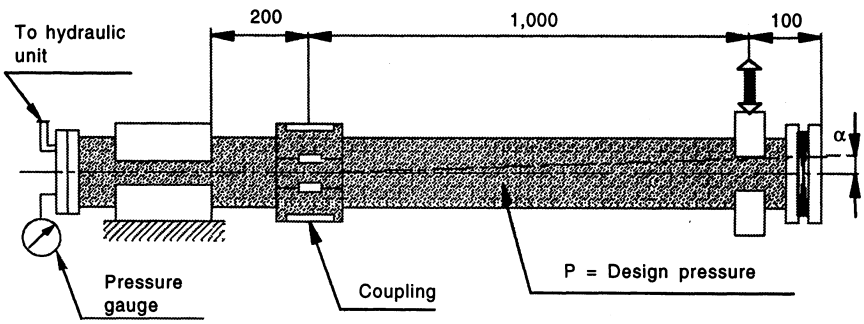

Fig 3.18.2 Example of Equipment for Vibration(fatigue) test
(D) The length of pipe connected to the fixed end should be kept as short as possible and in no case exceeds 200 mm.
(E) Mechanical joint assemblies are not to be longitudinally restrained.
(F) The assembly is to be filled with test fluid, de-aerated and pressurized to the design pressure of the joint.
(G) Preliminary angle of deflection of pipe axis is to be equal to the maximum angle of deflection, recommended by the manufacturer.
(H) The amplitude is to be measured at 1m distance from the center line of the joint assembly at free pipe end connected to the rotating element of the rig.
(I) Parameters of testing are to be as indicated below and to be carried out on the same assembly
<table>
<tr><th>Number of cycles</th><th>Amplitude (mm)</th><th>Frequency (Hz)</th></tr>
<tr><td rowspan="3">3×10^6</td><td>± 0.06</td><td>100</td></tr>
<tr><td>± 0.5</td><td>45</td></tr>
<tr><td>± 1.5</td><td>10</td></tr>
</table>
(J) Pressure during the test is to be monitored.
(K) In the event of a drop in the pressure and visual signs of leakage the test is to be repeated as described in 1803. 6.
(L) Visual examination of the joint assembly is to be carried out for signs of damage which may eventually cause leakage.
</td></tr>
<tr><td>3. Pressure pulsation test</td><td>mechanical joint assembly</td><td>
In order to determine capability of mechanical joint assembly to withstand pressure pulsation likely to occur during working conditions, joint assemblies intended for use in rigid connections of pipe lengths, are to be tested in accordance with the following method. The mechanical joint test specimen for carrying out this test may be the same as that used in the test in 1. (1) of this Table provided it passed that test.
(1) The vibration test in 2. of this Table and the pressure pulsation test are to be carried out simultaneously for compression couplings and pipe unions.
(2) The mechanical joint test specimen is to be connected to a pressure source capable of generating pressure pulses of magnitude as shown in Fig 3.18.3
(3) Impulse pressure is to be raised from 0 to 1.5 times the design pressure of the joint with a frequency equal to 30~100 cycles per minute.
(4) The number of cycles is not to be less than 5×10^5
(5) The specimen may have small deformation whilst under test pressure, but no leakage or visible cracks are permitted.
</td></tr>
</table>

Table 3.18.2 The outlines of testing methods of mechanical joints (continued)

Test item	Kinds	Type test method
3. Pressure pulsation test	mechanical joint assembly	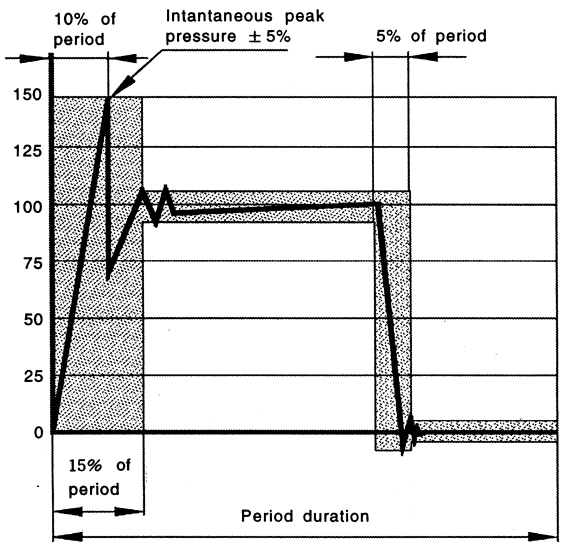 **Fig 3.18.3 Example of Equipment for Pressure Pulsation Test**
4. Burst pressure test	mechanical joint assembly	In order to determine the capability of the mechanical joint assembly to withstand a pressure 4 times the design pressure, the following burst test is to be carried out. For design pressure above 20 MPa the required burst pressure will be specially considered by the Society. (1) Mechanical joint test specimen is to be connected to the pipe or tubing in accordance with the requirements of **1803. 5,** filled with test fluid, de-aerated and pressurized to test pressure with an increasing rate of 10 % per minute of test pressure. (2) The mechanical joint assembly intended for use in rigid connections of pipe lengths is not to be longitudinally restrained. (3) Duration of this test is not to be less than 5 minutes at the maximum pressure. (4) This pressure value will be annotated. (5) Where consider convenient, the mechanical joint test specimen used in tightness test in **1.** of this **Table**, same specimen may be used for the burst test provided it passed the tightness test. (6) The specimen may have small deformation whilst under test pressure, but no leakage or visible cracks are permitted.
5. Pull-out test	mechanical joint assembly	In order to determine ability of a mechanical joint assembly to withstand axial load likely to be encountered in service without the connecting pipe from becoming detached, following pull-out test is to be carried out. (1) Pipe length of suitable size is to be fitted to each end of the mechanical joints assembly test specimen. (2) The test specimen is to be pressurized to design pressure. When pressure is attained, an external axial load is to be imposed with a value calculated by the following formula: The pressure and axial load are to be maintained for a period of 5 minutes $L = \frac{\pi}{4} \cdot D^2 \cdot p$ where: D =pipe outside diameter (mm) p =design pressure (N/mm^2) L =applied axial load (N) (3) During the test, pressure is to be monitored and relative movement between the joint assembly and the pipe measured. (4) The mechanical joint assembly is to be visually examined for drop in pressure and signs of leakage or damage. (5) There are to be no movement between mechanical joint assembly and the connecting pipes.

Table 3.18.2 The outlines of testing methods of mechanical joints (continued)

Test item	Kinds	Type test method
6. Fire endurance test	mechanical joint assembly	(1) In order to establish capability of the mechanical joints to withstand effects of fire which may be encountered in service, mechanical joints are to be subjected to a fire endurance test. The fire endurance test is to be conducted on the selected test specimens as per the following standards. (a) KS V ISO 19921: Ships and marine technology − Fire resistance of metallic pipe components with resilient and elastomeric seals − Test methods (b) KS V ISO 19922: Ships and marine technology − Fire resistance of metallic pipe components with resilient and elastomeric seals − Requirements imposed on the test bench. (2) If the fire test is conducted with circulating water at a pressure different from the design pressure of the joint (however of at least 5 bar) the subsequent pressure test is to be carried out to twice the design pressure. (3) A selection of representative nominal bores may be tested in order to evaluate the fire resistance of a series or range of mechanical joints of the same design. When a mechanical joint of a given nominal bore (Dn) is so tested then other mechanical joints falling in the range Dn to 2xDn (both inclusive) are considered accepted.
7. Vacuum test	mechanical joint assembly	In order to establish capability of mechanical joint assembly to withstand internal pressures below atmosphere, similar to the conditions likely to be encountered under service conditions, following vacuum test is to be carried out. (1) Mechanical joint assembly is to be connected to a vacuum pump and subjected to a pressure 170 hPa absolute. (2) Once this pressure is stabilized the mechanical joint assembly test specimen under test are to be isolated from the vacuum pump and this pressure is to be retained for a period of 5 minutes. (3) Pressure is to be monitored during the test. (4) No internal pressure rise is permitted.
8. Repeated assembly test	mechanical joint assembly	Mechanical joint test specimen are to be dismantled and reassembled 10 times in accordance with manufacturers instructions and then subjected to a tightness test as defined in **1** of this **Table.**

Section 19 Air Pipe Automatic Closing Devices

1901. Application

The requirements in this Section apply to tests and inspection for the approval of air pipe automatic closing devices extending above weather decks in accordance with the requirements in **Pt 5, Ch 6, 201.** of the Rules.

1902. Design and Materials

1. Design of the air pipe automatic closing devices is to comply with the following requirements.

(1) An air pipe automatic closing device is to prevent the free entry of water into the tanks and allow the passage of air or liquid to prevent excessive pressure or vacuum coming on the tank. For vacuum, air pipe automatic closing devices are to be made for relieving vacuum in the tanks when the tanks are also being pumped out.

(2) The open ends of air pipes to fuel oil and cargo oil tanks are to be furnished with the flame-screens which can be readily removed for cleaning or renewal and deemed appropriate by the Society. The clear area through the mesh of the flame-screens is not to be less than the required sectional area of the air pip

(3) Air pipe closing devices are to be designed so that they can withstand both ambient and working conditions up to an inclination of ± 40° without failure or damage.

(4) Air pipe closing devices are to be constructed to allow inspection of the closure and the inside of the casing as well as for changing the seals.

(5) In case of air pipe closing devices of the float type, suitable guides are to be provided to ensure unobstructed operation under all working conditions of heel and trim as specified in (3).

(6) Efficient ball or float seating arrangements are to be provided for the closures. Bars, cage or other devices are to be provided to prevent the ball or float from contacting the inner chamber in its normal state and made in such a way that the ball or float is not damaged when subjected to water impact due to a tank being overfilled.

(7) Air pipe closing devices are to be self draining.

(8) The clear area through an air pipe closing device is to be at least equal to the area of the inlet.

(9) The maximum allowable tolerances for wall thickness of ball floats are not to exceed ± 10 % of the nominal thickness.

(10) The inner and the outer chambers of an automatic air pipe head is to be of a minimum thickness of 6mm

2. Materials of the air pipe automatic closing devices is to comply with the following requirements.

(1) Casings of air pipe closing devices are to be of approved metallic materials adequately protected against corrosion.

(2) For galvanized steel air pipe heads, the zinc coating is to be applied by the hot method and the thickness is to be 70 to 100 μm.

(3) For areas of the head susceptible to erosion (e.g. those parts directly subjected to ballast water impact when the tank is being pressed up, for example the inner chamber area above the air pipe, plus an overlap of 10 degree or more either side) an additional harder coating should be applied. This is to be an aluminium bearing epoxy, or other equivalent, coating, applied over the zinc.

(4) Closures and seats made of non-metallic materials are to be compatible with the media intended to be carried in the tank and to sea water at ambient temperatures between -25 °C and 85 °C.

3. The flame-screens installed in automatic air pipe outlets are to comply with the following.

(1) They are to be made of corrosion resisting material.

(2) They are to comprise two fitted screens of at least 20 × 20 *mesh* spaced 25.4 ± 12.7 mm apart or single fitted screen of at least 30 × 30 *mesh*, or to have a performance equivalent thereto.

1903. Type tests

1. Testing of air pipe automatic closing devices

The following tests, specified in **Table 3.19.1**, for air pipe automatic closing devices by each type and size are to be carried out at the manufacturer's works or other acceptable location by the Society.

2. Impact and compression loading tests for the floats are to be carried out as specified in **Table 3.19.2.**

Table 3.19.1 Test methods and acceptance criteria for air pipe automatic closing devices

Kinds	Test Item	Type test method	Acceptance criteria
air pipe automatic closing devices	Tightness test	An automatic closing device is to be subjected to a series of tightness tests involving not less than two(2) immersion cycles under each of the following conditions. (1) The automatic closing device is to be submerged slightly below the water surface at a velocity of approximately 4 ml/min. and then returned to the original position immediately. The quantity of leakage is to be recorded. (2) The automatic closing device is to be submerged to a point slightly below the surface of water. The submerged velocity is to be approximately 8 m/min. and the air pipe vent head is to remain submerged for not less than 5 minutes. The quantity of leakage is to be recorded. (3) Each of the above tightness tests is to be carried out in the normal position as well as at an inclination of ±40° under the strictest conditions for the device. In case where such strictest conditions are not clear, tests shall be carried out at an inclination of 40 degrees with the device opening facing in three different directions : upward, downward, sideways(left or right).(See Figure 3.19.1)	The maximum allowable leakage per cycle is not to exceed 2 ml/mm of nominal diameter of inlet pipe during any individual test.
	Discharge/ Reverse flow thest	The air pipe head shall allow the passage of air to prevent excessive vacuum developing in the tank. A reverse flow test shall be performed. A vacuum pump or another suitable device shall be connected to the opening of the air pipe leading to the tank. The flow velocity shall be applied gradually at a constant rate until the float gets sucked and blocks the flow. The velocity at the point of blocking shall be recorded. 80% of the value recorded will be stated in the certificate.	
	Confirmation of the flow characteristic	Measuring of the pressure drop versus rate of volume flow is to be carried out using water and with any intended flame or insect screen in place.	To be as deemed appropriate by the Society
non-metallic floats	Impact test	(1) The test may be conducted on a pendulum type testing machine. The floats are to be subjected to 5 impacts of 2.5 N-m each. (2) Subsequently the floats are to be subjected to 5 impacts of 25 N-m each. At this impact energy level some localized surface damage at the impact point may occur.	The floats are not to suffer either permanent deformation, cracking or surface deterioration at this impact loading.
	Compression loading test	(1) Compression tests are to be conducted with the floats mounted on a supporting ring of a diameter and bearing area corresponding to those of the valve seating with which it is intended that float shall be used. (2) For ball type float, loads are to be applied through a concave cap of the same internal radius as the test float and bearing on an area of the same diameter as the seating. (3) For a disc type float, loads are to be applied through a disc of equal diameter as the float. (4) A load of 350 kg is to be applied over one minute and maintained for 60 minutes. The deflection is to be measured at intervals of 10 minutes after attainment of the full load.	The record of deflection against time is to show no continuing increase in deflection and, after release of the load, there is to be no permanent deflection.
metallic floats	Impact test	Tests are to be conducted in accordance with the impact test of non-metallic floats. The tests are to be carried out at room temperature and in the dry condition.	according to the requirement for impact test of non-metallic floats.

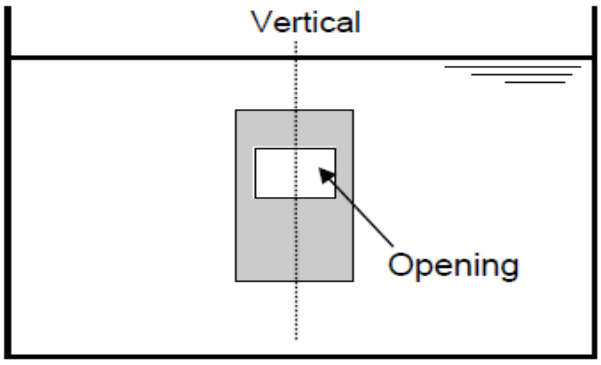

(1) normal position

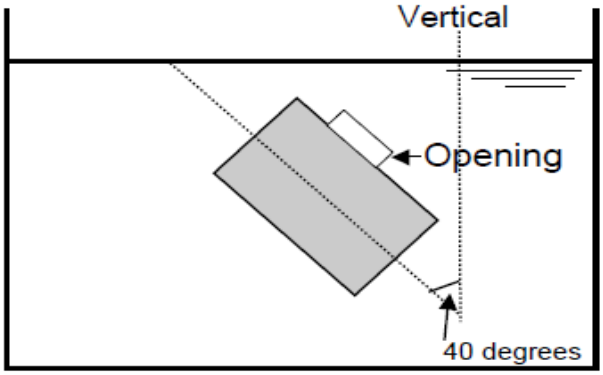

(2) inclination 40 degree opening facing upward

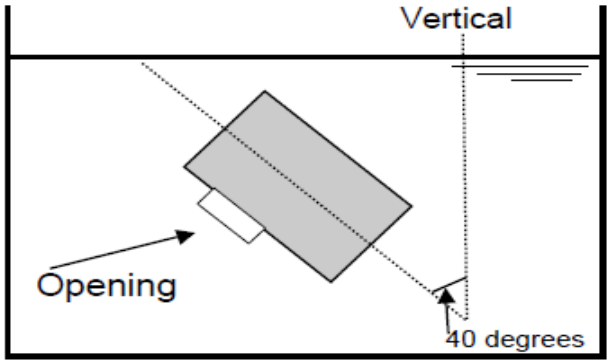

(3) inclination 40 degree opening facing downward

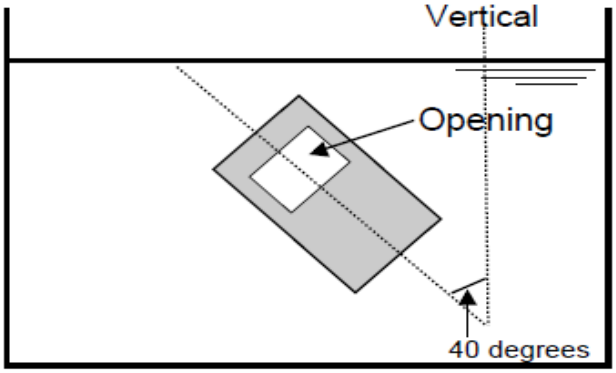

(4) inclination 40 degree opening facing sideways

Fig 3.19.1 Example of tightness test

Table 3.19.2 Temperature and Condition of Test

Test condition \ Test temperature (°C)	-25	20	85
Dry	○	○	○
After immerging in water	○	○	○
After immerging in fuel oil		○	

NOTES:
1. Type tests are to be performed for each test item indicated with a ○ mark in this Table.
2. Immerging in water and fuel oil is to be for 48 hours at least.

Section 20 Level Indicators

2001. Application

1. In accordance with the requirements in **Pt 5, Ch 6, 203. 4, Pt 7, Ch 1, 1002. 8** and **Pt 7, Ch 5** and **Ch 6** of the Rules, the requirements in this Section apply to tests and inspection for the approval of pneumatic, electric and/or electronic type level indicators installed in tanks, cofferdams, etc.

2. The level indicators include all parts of the device from the detector to the display.

2002. Construction

The construction of the level indicator is to satisfy the following requirements.

(1) To be able to adequately withstand ship vibration, ship motions, trim and heel.

(2) For devices which are used in tanks carrying flammable liquid, special consideration is to be given against prevention of generation and charge of static electricity.

(3) To be able to withstand the most severe pressure and temperature expected during working conditions and, for parts in contact with the liquid, to have adequate compatibility between the device and the liquid considered.

(4) The construction in addition of the above is also to be as follows:

(A) To be such that maintenance and inspection can be carried out easily and safely

(B) To have appropriate devices installed to prevent metal fittings from coming loose.

(5) To be provided with a mechanism to correct specific gravity where necessary.

(6) Electrical parts of the level indicator which is installed within the dangerous zones are to be of explosion protective construction as specified in each of the relevant Parts of the Rules.

2003. Type tests

1. The type tests are to include the following (1) through (5) depending on application and type of level indicators.

(1) In addition to conformity with the requirements in **2002.**, confirmation of whether the test sample agrees with the established specifications for completion, construction, dimensions and used parts.

(2) Confirmation of whether the test sample performs as specified where the configuration is in the regular installed direction and in 22.5° inclined direction under the working condition given in the following.

(A) Parts located out of the tank: normal temperature and maximum working pressure.

(B) Parts located inside the tank and on the tank walls: maximum and/or minimum working temperature (However, where this temperature is within the range of 0°C and 60°C, normal temperature may be used instead.) and maximum working pressure.

(3) For devices in which the liquid level is measured by use of floats and where the float is not fixed during navigation, confirmation of whether specified performance can be realized after a drop test in which the float is dropped from a height of 3 m onto a steel plate in 10 mm thickness. (However, where a damping device such as springs are provided at the top and bottom edge of the guide, tests may be carried out with such devices installed, although the tests are to be repeated at least ten times.)

(4) For devices in which the liquid level is measured by use of floats, confirmation of whether any damage occurs to the rubbing parts where the same equipped pipes and wires are set up horizontally and the float and guide are made to contact each other at the same places much as practicable. Then, for devices which the float is not fixed during navigation, rubbing tests which the float is slided 5,000 times between 5 m span are to be carried out.

(5) For the electrical parts of the devices, testing as given in the following (A) through (E). However the type tests are to comply with the requirements in **2304. 2** and, in case the explosion-protected construction is required, type tests also are to comply with the requirements in **2107.** of the Guidance.

(A) Dry heat test

(B) Damp heat test

(C) Vibration test

(D) Inclination test

(E) Electrical power supply variation test

2. Additional tests other than those of the preceding **1.** may be requested, where deemed necessary by the Society.

Section 21 Electrical Equipment and Cables

2101. General

1. Application

The requirements in this Section apply to tests and inspection for the type of electrical equipment and cables in accordance with the requirements in **Pt 6, Ch 1, 103.** of the Rules for Classification of Steel Ships.

2. Items subject to the tests

Electrical equipment and cables subject to the type test are to be as the requirements in **Table 3.21.1.**

Table 3.21.1 Electrical equipment and cables subject to the type test

Kinds	Electrical equipment and cables subject to the type test
Fuses	Cartridge type fuses (renewable and non-renewable) and plug type fuses used for the protection of the low-voltage electric circuits
Circuit breakers	Low-voltage breakers, air circuit breakers and molded case circuit breakers (including molded case circuit breakers with fuses and molded case circuit breakers used for the protection of induction motors simultaneously. Hereinafter, these are referred to as molded case circuit breakers unless otherwise specified.), used for protection of the electric circuits
Electromagnetic contactors and protective relays	Electromagnetic contactors and protective relays used for motors and other loads connected to the low-voltage electric circuits
Explosion-protected electrical equipment	Electrical equipment of the flameproof type, intrinsically safe type, increased safety type and pressurized protected type (limited to sealed type) used in the spaces on board flammable or explosive gas or vapour (hereinafter referred to as explosive gas) exists or may exist in the atmosphere.
Cables	(1) Cables used for power circuits, lighting circuits, supply and distribution circuits of interior-communication, control circuits, etc. (2) Flexible cords used for power supply and distribution circuits. (3) 150 V multi-core PVC insulated cables for electronic equipment.
Other electrical equipment	The following electrical equipment produced by mass production method at the same manufacturing plant which obtained the Approval of Quality Assurance System specified in **Ch 5** of the Guidance - Generators, electrical motor, control gears for electrical motor, power and lighting transformers, switchboards, axial flow fan driven by motor built in casing and semi-conductor rectifiers

2102. Data to be submitted

Data are to be submitted to the Society in accordance with the requirements in **102.** and the following drawings and documents are to be included for explosion-protected electrical equipment. Items (4), (5) and (6) are, however, required for intrinsically safe type electrical equipment only.

(1) Drawings of detailed sectional assembly and arrangement of components
(2) List of electrical parts and materials
(3) Functional descriptions of explosion-protected constructions
(4) Electric circuit diagrams
(5) Sectional assembly drawings of transformers with earthed screens and component parts (relays, photocouplers, etc.) used for maintenance of intrinsic safety
(6) Construction drawings and circuit diagrams of safety barriers

2103. Type tests

Type tests are to be carried out in accordance with the requirements in **2104.** to **2109.** for each product. In case where the Society deemed necessary, however, additional tests and/or an increase in the number of test samples may be required. For products specified in foreign standards, test items and the number of test samples will be decided at each case in accordance with the contents of the standards.

2104. Test method of fuses

The details of test are to comply with the recognized code (**IEC 60269** series, etc.). Where deemed necessary, the ambient temperature may be modified.

2105. Test method of circuit-breakers

The details of test are to comply with the recognized code (**IEC 60947-1**, **IEC 60947-2**, **IEC 62271-100** and **KS C 8321**, etc.). Where deemed necessary, the ambient temperature may be modified.

2106. Test method of electromagnetic contactors

The details of test are to comply with the recognized code (**IEC 60947-1**, **IEC 60947-4** and **KS C 4504**, etc.). Where deemed necessary, the ambient temperature may be modified.

2107. Test method of explosion-protected electric equipment

1. Test items and number of samples

The test items marked "O" in **Table 3.21.2** are to be conducted on one test sample per each explosion-protection type.

Table 3.21.2 Test Items of Explosion Protected Equipment

Types of explosion protection / Test items	Flameproof type	Intrinsically safe type	Increased safety type	Pressurized protected type
Construction inspection	○	○	○	○
Temperature rise test	○	○	○(note)	○
Mechanical strength test	○	○	○	○
Explosion test	○			
Pressurization test				○
Spark ignition test		○		
Other test deemed necessary	○	○	○	○

NOTE:
Temperature rise test in the locking test for motors is to be included.

REMARKS:
1. The mechanical strength test is to apply to movable apparatus, inspection windows, lighting fittings, portable lamps with batteries, plug-sockets and flexible fittings.
2. Other tests deemed necessary are to include thermal shock (heat resistance) test, water-tight test, air-tight test, function test of protective devices, etc.

2. Test methods

Test methods are to comply with the requirements given in **Table 3.21.3** or **IEC 60079** series.

Table 3.21.3 Test methods and acceptance criteria for explosion-protected equipment

<table>
<tr><th>Types</th><th>Test item</th><th>Test method</th><th>Acceptance criteria</th></tr>
<tr><td rowspan="4">Flameproof type electric equipment</td><td>(A) Explosion withstand test</td><td>(a) The enclosure is filled with the flammable mixture which will produce the explosion pressure specified in Table belows according to the internal volume and tested by repeatedly igniting and exploding the mixture 10 times.
<table>
<tr><td>Internal volume (cm^3)</td><td>Less than 2</td><td>2 over 100 incl.</td><td>over 100</td></tr>
<tr><td>Internal pressure (MPa)</td><td>Necessary for fabrication</td><td>0.8 or over</td><td>1.0 or over</td></tr>
</table>
(b) The gaps of the enclosure may be sealed temporally to perform the test.</td><td>The enclosure is not to be damaged or obstructively deformed</td></tr>
<tr><td>(B) Flame propagation test</td><td>(a) The flammable mixture having flame propagation characteristic which can prove the safe guardness against each gas involved in each explosion class is filled inside and outside the enclosure and is ignited inside the enclosure and exploded repeatedly 15 times. In case where the pressure specified in (A) of this Table is available in this test, the explosion withstand test above may be included in this test.
(b) The position considered as the flame propagation is most ready to occur in the enclosure is to be selected for the position of ignition.</td><td>The flame propagation is not to occur</td></tr>
<tr><td>(C) Temperature rise test</td><td>To pass the rated current to the equipment (as for lighting fixtures, by turning or the maximum applicable lamp with the rated current) until the temperature at each part is saturated.</td><td>The temperature rise of the external parts of the enclosure is not to exceed the limit specified in Table below
(Standard ambient temperature 50°C)
<table>
<tr><td>Ignition group</td><td>G_1</td><td>G_2</td><td>G_3</td><td>G_4</td><td>G_5</td></tr>
<tr><td>Limit of temperature rise</td><td>310</td><td>190</td><td>110</td><td>60</td><td>30</td></tr>
</table></td></tr>
<tr><td>(D) Mechanical strength test</td><td>(a) The steel ball falling test of light transparent plate, light transparent window and inspection window ;
The transparent plate (except for the cylindrical glass globes for fluorescent lamp) is dropped by the steel ball specified in Table below on the weakest part considered of the plate under the condition being fitted on to the equipment or equivalent condition.
<table>
<tr><td>Transparent material</td><td>Mass of steel ball (g)</td><td>Dropping height (cm)</td></tr>
<tr><td>Glove</td><td>95
(diameter approximately 28.5 mm)</td><td>100</td></tr>
<tr><td>Cylindric glass</td><td>50
(diameter approximately 23.0 mm)</td><td>100</td></tr>
<tr><td>Sheet glass</td><td>200
(diameter approximately 36.5 mm)</td><td>200</td></tr>
</table>
This test is, in principle, to be carried out on three test specimens and each of them is required to pass the test. For the indicating lamps, in case where the steel ball can not strike the glass cover through the openings of the guard, the test is to be conducted by dropping a steel ball sufficiently small to directly strike.</td><td>Not to cause any damage and cracks which may impair the flame-proofness</td></tr>
<tr><td></td><td>(b) The strength test of cylindrical glass globe for fluorescent lamp
The cylindrical glass globe is dropped by a steel ball of 50 g (diameter approximately 23 mm from a height of 100 cm on the weakest part considered of the cylindrical glass globe under the condition being fitted on to the equipment and held horizontally. And, the cylindrical glass globe is applied the internal hydrostatic pressure of not less than 2.0 MPa for 15 seconds. This test is, in principle, to be carried out on three test specimens and each of them is required to pass the test.</td><td>The cylindrical glass globe is not to be damaged and is to withstand the internal hydrostatic pressure.</td></tr>
</table>

Table 3.21.3 Test methods and acceptance criteria for explosion-protected equipment (continued)

Types	Test item	Test method	Acceptance criteria
Flameproof type electric equipment	Drop test for portable type apparatus	The portable type apparatus is dropped three times on to the steel plate of 6 mm in thickness from a height of 1.5 m by changing the position to collide.	Not to be impairer the flame-proofness
	Thermal shock test	The electric apparatus with light transparent windows or inspection windows is poured by water at a temperature of 10°C lower than the room temperature (minimum 5°C) onto the electric apparatus after the electric apparatus has been operated until the temperature of the light transparent material is saturated. This test is, in principle, to be carried out on three test specimens and each of them is required to pass the test. The test, however, may be omitted in case where the light transparent material can be considered to have a little temperature rise and to pass the thermal shock test apparently judging from test results in the past.	Not to cause cracks of damage on the light transparent material
Intrinsically safe type electrical equipment	Temperature rise test	The temperature rise of the parts in contact with explosive gas of the intrinsically safe type electrical equipment is measured under the normal operational condition and under the maximum current or voltage which can be generated in time of fault. The test, however, may be omitted in case where the temperature rise of the apparatus can be considered not to exceed the limit apparently judging from the test results in the past.	not to exceed the limit specified in the temperature rise test of flameproof type electric equipment
	Spark ignition test	The intrinsically safe type electric equipment, at all parts of intrinsically safe circuit, is to be carried out the spark ignition test specified in the following (a) to (e) by using the **IEC** type spark ignition testing apparatus to verify that any sparks in normal operation and abnormal condition (short circuit, earth fault, breakage of cable, etc.) do not ignite explosive gas or vapour specified in **Table 3.21.1.** This test apply to the first product and may be omitted for the subsequent products of the same manufacturer in case where the voltage or the current of the circuit specified in the following (a) does not exceed that of the spark ignition test circuit by 20 %. (a) The spark ignition test is to be conducted in way of the circuit where the maximum voltage or current can be generated in normal operation and abnormal condition. For the safety barrier, however, the test is to be conducted at the connecting terminals of the intrinsically safe circuit side by applying the intrinsically safe rated voltage to the non-intrinsically safe circuit side. The intrinsically safe rated voltage means the voltage generated in the non-intrinsically safe circuit in normal operation and abnormal condition and the maximum voltage in the non-intrinsically safe circuit side of the safety barrier at which the intrinsical safety can be ensured. (b) The value of the testing voltage or the testing current is to be the value obtained from multiplying the maximum voltage or current in normal operation and abnormal condition in the circuit to be intrinsical safe by the safety factor. The safety factor is, in principle, to be 2. (c) The number of revolutions of the testing equipment is to be more than 200 times per each pole for the d.c. circuit and more than 1,000 times for the a.c. circuit. (d) The test gas is, in principle, to comply with either of the following: (i) 1 Class: Propane-air mixture gas (5.25 ± 0.25 vol %) (ii) 2 Class: Ethylene-air mixture gas (7.8 ± 0.5 vol %) (iii) 3 Class: Hydrogen-air mixture gas (21 ± 2 vol %)	The intrinsically safe type electric equipment, at all parts of intrinsically safe circuit, is to pass the spark ignition test

Table 3.21.3 Test methods and acceptance criteria for explosion-protected equipment (continued)

<table>
<tr><th>Types</th><th>Test item</th><th>Test method</th><th>Acceptance criteria</th></tr>
<tr><td rowspan="2">Intrinsically safe type electrical equipment</td><td>Spark ignition test</td><td>(e) The sensitivity of the spark ignition testing equipment before and after the test is to be adjusted so that the maximum ignition current becomes approximately 65 mA for ethylene-air mixture gas and approximately 30 mA for hydrogen-air mixture gas when the sparks are produced in the gas by inserting the testing equipment into the electric circuit as shown in Fig below.
 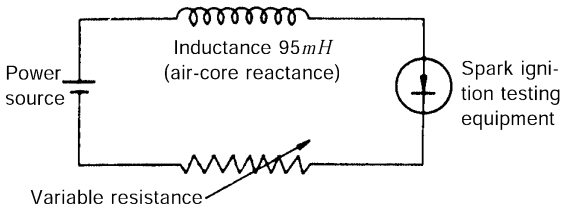

Fig. Circuit Diagram of Spark Ignition Test</td><td></td></tr>
<tr><td>Drop test for portable type apparatus</td><td>The portable type apparatus is dropped onto the steel plate of 6 mm in thickness fixed on the floor from an effective height of 1.5 m. The test is to be carried out three times by changing the positions to collide which are selected as the weakest positions judging from the structural features of the test specimen.</td><td>Not to be damaged on the external covers and not to cause damage or deformation in the internal circuit which may impair the intrinsical safety</td></tr>
<tr><td rowspan="2">Increased safety type electrical equipment</td><td>Temperature rise test</td><td>The temperature rise of the increased safe type electrical equipment is to comply with the following (a) to (d) by being continuously supplied under the rated voltage, the rated output or capacity.
(a) Temperature rise of electrical equipment against explosive gas
The temperature rise of the all parts which may be exposed to explosive gas is measured. The temperature rise of insulating windings and bulb socket is to comply with the requirements of the following (b) and (c).
(b) Temperature rise of insulating windings The temperature rise of the insulating windings used for the electric equipment is to be 15°C lower than the value specified in Pt 6, Ch 1, 304. of the Rules for Classification of Steel Ships. The thermometer method may be used only when the resistance method is hardly applied.
(c) Temperature rise of bulb socket
The temperature rise of the rim and the soldered part of the bulb is not to exceed 145°C.
(d) Temperature rise of leading part of external cable
The temperature rise of the cable entry points is not to exceed 20°C and that of the branching points of the conductor is not to exceed 30°C.</td><td>The temperature rise of the all parts which may be exposed to explosive gas is not to exceed the limit given in Table below.
<table><tr><th>Ignition group</th><th>G1</th><th>G2</th><th>G3</th><th>G4</th></tr><tr><td>Enclosures and their parts</td><td>310</td><td>190</td><td>110</td><td>60</td></tr><tr><td>Surface of lamps for lighting fittings</td><td>350</td><td>300</td><td>250</td><td>150</td></tr></table></td></tr>
<tr><td>Thermal shock test</td><td>The protective lamp cover of the lighting fitting is poured by a water jet with a diameter of approximately 1 mm and with a temperature of approximately 20°C onto the parts having the highest temperature, after applying the rated voltage to the maximum applicable bulb until the temperature rise of the outside surface of the protective lamp cover is saturated.</td><td>The protective lamp cover of the lighting fitting is not to be damaged or cracked</td></tr>
</table>

Table 3.21.3 Test methods and acceptance criteria for explosion-protected equipment (continued)

<table>
<tr><th>Types</th><th>Test item</th><th>Test method</th><th>Acceptance criteria</th></tr>
<tr><td rowspan="2">Increased safety type electrical equipment</td><td>Waterproof test</td><td>The electrical equipment is to be tested according to the requirements of test method for IPX4 specified in IEC 60529.</td><td>To comply with the requirements of waterproof test and is to have the waterproof performance accordingly necessary for the place where the electrical equipment is intended to be installed.</td></tr>
<tr><td>Mechanical strength test of lighting fittings</td><td>The lighting fittings are dropped by a steel ball (as the end of object) of 25 mm in diameter and a mass specified in Table below at the tip onto the weakest part considered from the height specified in the Table, under the condition being fitted on a fixed table.
<table>
<tr><th rowspan="2">Electrical apparatus</th><th rowspan="2">Mass of steel ball (kg)</th><th colspan="3">Height of fall (m)</th></tr>
<tr><th>Enclosures</th><th>Lamp protective cover</th><th>Guard</th></tr>
<tr><td rowspan="2">Incandescent lights and mercury lights</td><td>1</td><td>-</td><td>0.7</td><td>-</td></tr>
<tr><td>2</td><td>2</td><td>-</td><td>2</td></tr>
<tr><td>Fluorescent lights</td><td>1</td><td>2</td><td>0.7</td><td>2</td></tr>
</table></td><td>Not to be damaged</td></tr>
<tr><td rowspan="2">Pressurized protective type electrical equipment (sealed type only)</td><td>Temperature rise test</td><td>The temperature rise test is to be carried out in accordance with that of flameproof type electrical equipment.</td><td>The temperature rise of the external parts of the enclosure is not to exceed the limit specified in table of the flameproof type electrical equipment.</td></tr>
<tr><td>Internal pressure test</td><td>The internal pressure test is to comply with the followings.
(a) Internal pressure maintaining test
Being filled with the protective gas up to the specified value,

(b) Operating test of protective device
The pressure of the protective gas falls below the specified value. The test is, in principle, to be conducted for 5 times.</td><td>(a) The internal pressure of the equipment is to be satisfactorily maintained.
(b) the device indicating the pressure fall is to operate satisfactorily.</td></tr>
</table>

2108. Test method of cables

1. The details of test are to comply with the recognized code **IEC 60092-350**, etc. given in **Table 3.21.4.** Where deemed necessary, the ambient temperature may be modified.
2. In addition to 1 above, tests for vertical flame spread of vertically bunched cable are to be carried out in accordance with **IEC 60332-1** or **IEC 60332-3-22**.

Table 3.21.4 Type test item of cables

No.	Test items	IEC code
1	Visual inspection	
2	Conductor resistance test	**IEC 60092-350, 5.2.2**
3	Voltage test	**IEC 60092-350, 5.2.3**
4	Insulation resistance	**IEC 60092-350, 6.9 & 7.2**
5	Conductor examination	**IEC 60092-350, 6.4**
6	Insulation thickness	**IEC 60092-350, 6.5 & 8.2**
7	Non-metallic sheaths thickness	**IEC 60092-350, 6.6 & 8.3**
8	External diameter	**IEC 60092-350, 6.7**
9	Hot-set test for insulations and sheaths	**IEC 60092-350, 6.8**
10	Increase in a.c. capacitance after immersion in water	**IEC 60092-350, 7.3**
11	High voltage test for 4 h	**IEC 60092-350, 7.4**
12	Mutual capacitance (control and instrumentation cables only)	**IEC 60092-350, 7.5**
13	Inductance to resistance ratio (control and instrumentation cables only)	**IEC 60092-350, 7.6**
14	Mechanical properties of insulation before and after ageing	**IEC 60092-350, 8.4**
15	Mechanical properties of sheaths before and after ageing	**IEC 60092-350, 8.5**
16	Compatibility test	**IEC 60092-350, 8.6**
17	Loss of mass test on PVC ST2 sheath	**IEC 60092-350, 8.7**
18	Test for the behaviour of PVC ST2 and halogen-free SHF1 sheaths at high temperatures (hot pressure test)	**IEC 60092-350, 8.8**
19	Test for the behaviour of PVC sheath ST2 and halogen-free SHF1 and SHF2 sheaths at low temperature	**IEC 60092-350, 8.9**
20	Special test for low temperature behaviour (when required)	**IEC 60092-350, 8.10**
21	Test of the metal coating of copper wires	**IEC 60092-350, 8.11**
22	Galvanizing test	**IEC 60092-350, 8.12**
23	Test for resistance of PVC ST2 and halogen-free SHF1 sheaths to cracking (heat shock test)	**IEC 60092-350, 8.13**
24	Ozone resistance test for insulation and for sheaths	**IEC 60092-350, 8.14**
25	Oil immersion test for sheaths	**IEC 60092-350, 8.15**
26	Mud drilling fluid test (when required)	**IEC 60092-350, 8.16**
27	Fire tests	**IEC 60092-350, 8.17**
28	Determination of hardness for HEPR	**IEC 60092-350, 8.18**
29	Determination of elastic modules for HEPR	**IEC 60092-350, 8.19**
30	Durability of print	**IEC 60092-350, 8.20**

2109. Other electrical equipment

1. The type tests are to be carried out on the electrical equipment random selected one for each frame No. or type from the production line to verity their compliance with the relevant requirements of **Pt 6, Ch 1** of the Rules.

2. The items of the type tests are, in general, to be in accordance with the requirements given in **Table 3.21.5**. In case where the Society specifically deems necessary, additional test items or number of test samples may be required.

Table 3.21.5 Type test item of other electrical equipment

Electrical equipment	The items of the type tests
Generators	(1) Construction inspection (2) Running test: Temperature rising test, overload test, over-current test, overspeed test (3) Characteristics test: Voltage variation test, transient voltage variation test (4) Insulation resistance test (5) High voltage test (6) Vibration measurement, noise level measurement (7) Performance test of air cooler (8) Other tests
Electric motors	(1) Construction inspection (2) Operational test: Temperature rising test, overload test, over-torque test, commutation test and overspeed test (3) Characteristics test: Load characteristics test (4) Insulation resistance test (5) High voltage test (6) Vibration measurement and hose test (7) Other tests
Controlgears for electric motor	(1) Construction inspection (2) Temperature rising test (3) Operational test (including circuit inspection) (4) Insulation resistance test (5) High voltage test (6) Other tests
Power and lighting transformer	(1) Construction inspection (2) Temperature rising test (3) Insulation resistance test (4) High voltage test (5) Induced high voltage test (6) Other tests
Switchboards	(1) Construction inspection (2) Temperature rising test (for main circuits) (3) Operational test (4) Insulation resistance test (5) High voltage test (6) Other tests
Axial flow fan driven by motor built in casing	(1) Construction inspection (2) Combined running tests: Temperature rising test, air flow rate and static air pressure measurements, shaft power measurements (3) Insulation resistance test (4) High voltage test (5) Vibration measurement, noise level measurement (6) Other tests
Semi-conductor rectifiers	(1) Construction inspection (2) Temperature rising test (3) Operation test (4) High voltage test (5) Insulation resistance test

3. Tests and inspection

(1) The test and inspection methods are to be in accordance with requirements of **KS** or as deemed appropriate by the Society.

(2) The overload test provided in **Par 2** above is to be carried out continuously under the load of 110 % of the rated output for the duration necessary for saturation of the temperature of each part plus two hours. However, there is no limit of temperature rise.

(3) Tests and inspection other than those specified in **Par 2** above are defined upon agreement between the Society and the manufacturer.

4. Tests of individual electrical equipment after approval

Tests of individual electrical equipment after approval are defined upon agreement between the Society and the manufacturer.

Section 22 Cable Laying

2201. Application

The requirements in this Section apply to tests and inspection for the approval of fire stop method for bunched cables (ex: fire stop mat, hereinafter referred to **fire stop methods** in this Section) and nonmetallic cable bands which are required an advance approval by the Society in accordance with the requirements in **Pt 6, Ch 1, 103.** and **507. 4** of the Rules for Classification of Steel Ships, **Pt 6, Ch 1, 504. 1** and **507. 1** of the Guidance relating to the Rules for the Classification of Steel Ships.

2202. Data to be submitted

The manufacturer or constructer is to submit to the Society the drawings and documents specified in (1) for the approval of the fire stop methods, and those specified in (2) for the approval of nonmetallic cable bands in addition to those specified in **102.**

(1) Fire stop methods of cable
  (A) Characteristic of materials
  (B) Instructions for work procedures (in case of paints being used, the painting method and procedure including painting condition and the dry film thickness of paint are to be specified)
  (C) Copies of certificates or test records issued by official organizations (if any)

(2) Nonmetallic cable bands
  (A) Type name
  (B) Construction plan (including principal dimensions)
  (C) Characteristic of materials
  (D) Copies of certificates or test records issued by official organizations (if any)

2203. Type tests

1. Prevention methods of flame spread through cable

The type tests for prevention methods of flame spread through cable are to be carried out in accordance with **IEC 60332-3-22.**

2. Nonmetallic cable bands

The type tests for nonmetallic cable bands are, according to the purpose and kind, to be carried out in accordance with the requirements given in **Table 3.22.1.**

Table 3.22.1 Approval test method and acceptance criteria for non-metallic cable bands

Kind	Test item	Approval test method and acceptance criteria
Test specimens		The tests are to be done with the ten test specimens which were left in air for 30 minutes prior to tests, after conditioned at 20 ± 2°C and 50 ± 2% relative humidity for 24 hours.
Test method	Flame retardant test	(a) The test specimens are to be set upright in a test box of 1,200 ± 25 mm high, 300 ± 25 mm wide, 450 ± 25 mm deep, opened front face, nonmetallic bottom and other faces made of wire net and the distance from the lowest side of specimens to the bottom is to be adjusted to 50 mm. (b) The heating source from gas burner with tip of inner diameter 10 mm is to be blue flame of length of 100 mm and temperature of 800 ± 50°C. (c) The bottom of burner is to be at an angle of 45° against the specimens and the flame center is to be positioned at the height of 50 mm above the lowest side of specimen. The flame is to be applied for 60 seconds. (d) When the flame is removed, the flame ignited on the specimen is to be self-extinguished and the burnt trace is not to reach to the top of upper part as cleaned.

Table 3.22.1 Approval test method and acceptance criteria for non-metallic cable bands (continued)

<table>
<tr><th>Kind</th><th>Test item</th><th>Approval test method and acceptance criteria</th></tr>
<tr><td rowspan="2">Test method</td><td>Mechanical property test before and after aging test</td><td>(a) The tensile strength for ten test specimens is to be measured using the jig shown in Fig 3.22.3 before and after the aging test. The length of A described in the Fig is 30 mm for specimens of 200 mm length or less, and is chosen as appropriate for those of more than 200 mm length.
 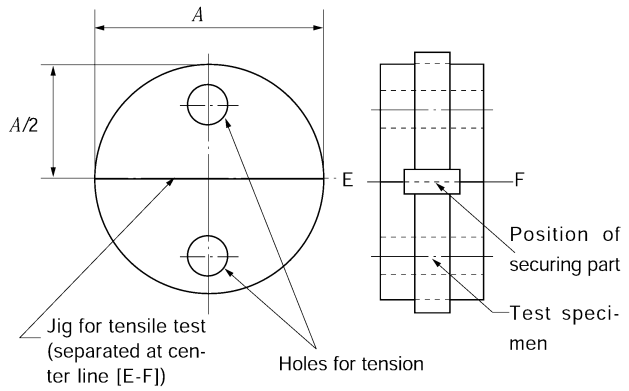

Fig. 3.22.3 Attachment for Test Specimen of Cable Band
(b) The test specimens are to be placed at a temperature of 90 ± 2°C for 240 hours.
(c) The required tensile strength before and after aging test is shown in Table below.
<table>
<tr><th rowspan="2">Length of test specimen (mm)</th><th colspan="2">Min. tensile strength (N)</th></tr>
<tr><th>before aging test</th><th>after aging test</th></tr>
<tr><td>200 or below</td><td>250</td><td>188</td></tr>
<tr><td>over 200</td><td>500</td><td>375</td></tr>
</table></td></tr>
<tr><td>Bending test of low temperature</td><td>(a) Effective length of specimen except securing part and end is to be tested.
(b) After the aging test in (b) of Mechanical property test before and after aging test above, the diameter of round bar which is not more than 5 times of thickness of test specimens and specimens are to be placed at temperature of - 25 ± 2°C for four hours, and the test specimens are spirally rolled on the bar 5 times at the speed of one revolution per 5 seconds.
(c) When the test specimens rolled on the round bar are placed at room temperature, any crack is not to be allowed.</td></tr>
</table>

3. Nonmetallic cable trays/protective casings

The type tests for cable trays/protective casings made of plastics materials are, according to the purpose and kind, to be carried out in accordance with the requirements given in **Table 3.22.2.**

Table 3.22.2 type tests for cable trays/protective casings made of plastics materials

Test item	Approval test method and acceptance criteria
Impact Resistance Test	The test should be performed according to **IEC 60082-2** using the pendulum hammer. (a) The test should be carried out on samples of cable tray lengths or cable ladder lengths of 250 mm ± 5 mm long. Samples of ladder should consist of two side-members with one rung positioned centrally. Samples of mesh trays should be prepared in such a way that there will be a wire in the centre. (b) Before the test, plastics components should be aged at a temperature of 90℃ ± 2℃ for 240 h continuously. (c) The samples should be mounted on wooden fibreboard of thickness 20 mm ± 2 mm.

Table 3.22.2 type tests for cable trays/protective casings made of plastics materials (continued)

<table>
<tr><th colspan="2">Test item</th><th>Approval test method and acceptance criteria</th></tr>
<tr><td colspan="2">Impact Resistance Test</td><td>(d) The samples to be tested should be placed in a refrigerator, the temperature within which is maintained at the declared temperature below with a tolerance of ±2℃.
-25℃ to 90℃ for outdoor use
+ 5℃ to 90℃ for indoor use.
Consideration will be given to the use of plastics cable trays/protective casings in the cold environment where the ambient temperature is below -25℃ provided the mechanical properties of the plastics can be maintained for the intended purpose and the installation location. In this particular instance, the cold bend and cold impact properties of the material should also be considered.
(e) After 2 h, the samples should, in turn, be removed from the refrigerator and immediately placed in the test apparatus.
(f) At 10 s ± 1 s after removal of each sample from the refrigerator the hammer should be allowed to fall with impact energy, mass of the hammer and fall height as belows:
<table>
<tr><th>Approximate energy(J)</th><th>Mass of hammer (kg)</th><th>Fall height(mm)</th></tr>
<tr><td>10</td><td>5.0</td><td>200 ± 2</td></tr>
</table>
(g) The impact should be applied to the base, or the rung, in the first sample, to one of the side members in the second sample, and to the other side member in the third sample. In each case, the impact should be applied to the centre of the face being tested.
(h) After the test, the samples should show no signs of disintegration and/or deformation that will impair the safety.</td></tr>
<tr><td rowspan="3">Safe Working Load (SWL) Test</td><td>application</td><td>Tests should be carried out for the smallest and largest sizes of cable trays lengths or cable ladder lengths, having the same material, joint and topological shape.</td></tr>
<tr><td>Test temperature</td><td>Cable trays/protective casings and joints should be tested at the declared temperatures according to (d) of impact resistance test above. Alternatively, tests can be carried out:
(a) at any temperature within the declared range if documentation is available which states that the relevant structural properties of the materials as used within the system do not differ by more than 5% of the average between the maximum and minimum property values, or,
(b) only at maximum temperature within the range, if documentation is available, which states that the relevant structural properties of the materials, as used within the system decrease when the tempera ture is increasing, or
(c) at maximum and minimum temperature only.</td></tr>
<tr><td>Test loads</td><td>All loads should be uniformly distributed (UDL) over the length and width of the samples as shown in Fig 3.22.4. The loads should be applied in such a way that a UDL is ensured even in the case of extreme deformation of the samples.
 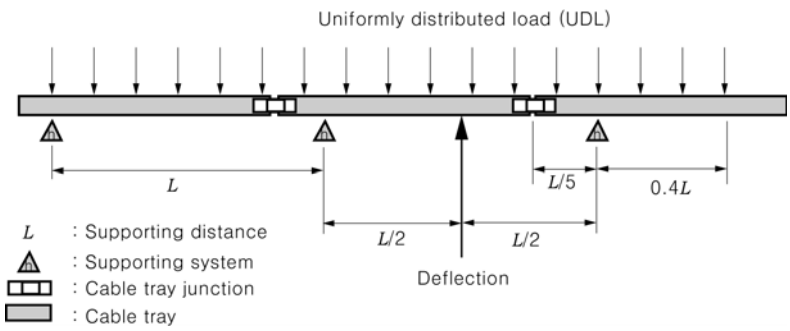

Fig 3.22.4 UDL applying method</td></tr>
</table>

Table 3.22.2 type tests for cable trays/protective casings made of plastics materials (continued)

Test item		Approval test method and acceptance criteria
Safe Working Load (SWL) Test	Load test	(a) To allow for settlement of the samples, a pre-load of 10% of the test load unless otherwise specified, should be applied and held for at least 5 min, after which the measurement apparatus should be calibrated to zero. (b) The load should then be gradually increased evenly longitudinally and transversely up to the test load continuously or when a continuous increase is impractical, the load may be increased by increments. These increments should not exceed about a quarter of the safe working load. The load increments should be distributed through the load plates longitudinally and transversely as evenly as is practical. (c) After loading, the deflection should be measured at the points specified to give a practical mid-span deflection.(refer to **Fig 3.22.4**) The samples should be left and the deflections measured every 5 minutes until the difference between two consecutive sets of readings is less than 2 % with regard to the first set of the two consecutive sets of readings. The first set of readings measured at this point is the set of deflections measured at the test load. (d) The maximum deflection should not exceed L/100 where L is the distance between the supports. (refer to **Fig 3.22.4**) (e) When subject to the test load the samples, their joints and internal fixing devices, should show no damage or crack visible to normal view or corrected vision without magnification.
	Breaking test	(a) The load should then be increased to l.7 times the test load. (b) The samples should be left and the deflections measured every 5 min until the difference between two consecutive sets of readings is less than 2 % with regard to the first set of the two consecutive sets of readings.(refer to **Fig 3.9.2**) (c) The samples should sustain the increased loading without collapsing. Buckling and deformation of the samples is permissible at this loading.
Flame Retardant Test		The cable trays/protective casings should be at least flame retardant. They should be tested in accordance with **Table 3.26.1** of **2604.** of this Guidance.
Smoke and Toxicity Test		The cable tray/protective casings should be tested in accordance with **2604. 4.** of this Guidance.
Resistivity Test		(a) Cable trays/protective casings passing through a hazardous area should be electrically conductive. The cable tray/protective casings should be tested in accordance with **IEC 60093.** (b) The volume resistivity level of the cable trays/protective casings and fittings should be below 10^5 ohm and the surface resistivity should be below 10^6 ohm. The resistance to earth from any point in these appliances should not exceed 10^6 ohm.

Section 23 Automatic and Remote Control Systems

2301. Application

1. The requirements of this Section apply to tests and inspection for the type approval of the automatic and remote control systems (device, units and sensors, etc) including basic softwares(if any) for use in the marine environment in accordance with the requirements in **Pt 6, Ch 2, 301. 1** of the Rules. However, the automatic and remote control systems that are to be installed less than 5 m from magnetic compass are to comply with the requirement in following (1) and fire detection system and gas detection system are to comply with the requirements in following (2) to (4).

(1) Compass safe distance test for the automatic and remote control systems that are to be installed less than 5 m from magnetic compass is to be carried out in accordance with **IEC 60945 11.2**.

(2) Fire detection system is to comply with the EN 54 series or equivalent standard.

(3) Design requirements and performance tests for gas detection system for measurement and detection of fixed/portable combustible gases are to comply with IEC 60079-29-1 or equivalent standard. However audible alarm level and signal characteristics are to comply with IMO Res. A.830(19).

(4) Gas detection system for oxygen detection and measurement is to comply with the EN 50104 or equivalent standard, However audible alarm level and signal characteristics are to comply with IMO Res. A.830(19).

2. Electrical and electronic equipment on board ships, required neither by the Rules of the Society nor by International conventions, liable to cause electromagnetic disturbance are to be of type which fulfil the test requirements of test specification item 20 and 21 of **Table 3.23.1**.

3. The automatic and remote control systems are to be provided with a degree of protection appropriate to the location in accordance with the requirements in **Pt 6, Ch 1, 201. 2** of **Rules for the Classification of Steel Ships**.

2302. Data to be submitted

The following reference data are to be submitted to the Society in addition to those specified in **102.**

1. General

(1) All documentation shall provide relevant information in a clear and unambiguous manner..

(2) Symbols and abbreviations used shall be explained, or referenced to an appropriate international standard or code recognized by the Society.

2. Hardware

(1) System block diagram, showing the arrangement, input and output devices and interconnections

(2) Wiring diagram (electrical systems), piping diagram (pneumatic or hydraulic systems)

(3) Details of input and output devices

(4) Details of power supplies

3. System functional description

(1) System specifications

(2) System performance for normal or abnormal equipment operation.

(3) Instructions for normal and abnormal operating modes;

(4) Transfer of control

(5) Redundancy or reversionary mode

(6) Test facilities

(7) Failure detection and identification facilities (automatic and manual)

(8) Data security

(9) Access restriction

(10) Special aspects requiring user attention.

(11) In addition, documentation shall be provided concerning procedures for:

(a) start-up

(b) restoration of functions

(c) maintenance and periodical testing

(d) data back-up

(e) software reload and system regeneration

(f) failure location and repair

4. Software

(1) Quality plan

(2) Software shall be fully described, e.g.:

(a) a description of the basic software installed in each hardware unit;

(b) a description of the communication software installed on nodes in a network;

(c) descriptions of application software (not program listings);

(d) tools for system set-up and process equipment configuration.

(3) The description of application software shall include, e.g.:

(a) information of system modules that must be operative in order to maintain functions including dependencies on other systems;

(b) detail of each module at a level sufficient to understand its function;

(c) relationship between the software modules that must be operative in order to maintain each function;

(d) data and control flow between software modules;

(e) configuration of the software, including priority schemes;

(f) switching mechanisms for redundant systems.

(4) A schedule of anticipated equipment operation ranges and limits for alarm and safety functions shall be provided.

5. User interface

(1) Control station design and arrangement shall be detailed including drawings, dimensions, pictures, etc. of each user input or output device at a level sufficient to asses the working principles.

(2) Details of screen-based computer dialogue shall be produced, including:

(a) description of the functions allocated to each input device;

(b) details of individual screen views, e.g. schematics, colour photos, etc.;

(c) description of menu operation.

6. Failure analysis for safety related functions only is to be carried out using appropriate means such as FMEA and the results are to be submitted to the Society,

2303. Type test report

Upon completion of the type test, the manufacturer is to submit to the Society the complete test report including test conditions, test results and required information.

2304. Type test

1. Hardware

(1) **General**

(A) Tests are to be carried out under following atmosphere conditions, rated electrical source voltage and rated electrical source frequency unless otherwise specified.

(a) temperature : 25 ± 10 ℃

(b) relative humidity : 60 ± 30 %

(c) atmospheric pressure : 96 kPa ± 10 kPa

(B) Measuring and testing equipment used in the type test are to be calibrated in accordance with the related standards and/or codes.

(C) The number of EUT(Equipment Under Test) is, as a rule, to be one for each type. However, additional EUT may be required when deemed necessary by the Society.

(D) Raising and lowering rate of temperature is to be within 1℃/min (mean value for 5 minutes) unless otherwise specified.

(E) Power supply variation test and pressure test are applied on pneumatic and hydraulic type equipment only.

(F) Flame retardant test is to be generally applied by manufacturer's option to demonstrate that plastic components of the equipment under test with a large mass are flame retardant and self-extinguishing under the influence of flame.

(2) **Test methods and criteria**

(A) After the drawings and documents submitted in accordance with the requirements in **2302.**

have been examined, tests are to be carried out in accordance with the testing condition and method of **Table 3.23.1** in the presence of the Society's surveyor, and they are to be proven to satisfy the criteria of **Table 3.23.1.**

(B) Where tests which do not fully comply with the testing condition and method, and the criteria of **Table 3.23.1**, they may comply with a standard deemed appropriate by the Society such as **IEC**, Korean Industrial Standards(**KS**), etc.

(C) In contrast to a complete performance test, a functional test is a simplified test sufficient to verify that the equipment under test(ETU) has not suffered any deterioration caused by the individual environmental tests.

2. Software

(1) **Module tests**

Software module tests are to provide evidence that each module performs its intended function and does not perform unintended functions.

(2) **Subsystem tests**

Subsystem testing is to verify that modules interact correctly to perform the intended functions and do not perform unintended functions.

(3) **System test**

System testing is to verify that subsystems interact correctly to perform the functions in accordance with specified requirements and do not perform unintended functions.

3. Performance tests

(1) **Integration tests**

Programmable electronic system integration testing is to be carried out using satisfactorily tested system software, and as far as practicable intended system components.

(2) **Fault simulation**

Faults are to be simulated as realistically as possible to demonstrate appropriate system fault detection and system response. The results of any required failure analysis are to be observed.

Table 3.23.1 Environmental Test Items, Testing Conditions and Methods, and Criteria

<table>
<tr><th>No.</th><th>Test item</th><th>testing condition and method</th><th>Criteria</th></tr>
<tr><td>1</td><td>Visual inspection</td><td>· Examine the external, structure, etc., of the equipment.</td><td>· The equipment comply with the specifications.</td></tr>
<tr><td>2</td><td>Performance test</td><td>· Check the operation of the equipment.
· Check the self monitoring features if provided.
· Check the specified protection against an access to the memory.
· check against the effect of unerroneous use of control elements in the case of computer systems.
· When the EUT is required to comply with an international performance standard, e.g. protection relays, verification of requirements in the standard are to be part of the performance testing required in this initial test and subsequent performance tests after environmental testing.</td><td>· The equipment operates satisfactory.</td></tr>
<tr><td>3</td><td>Electrical power supply failure test</td><td>· Check the operation of the equipment when the electrical power supply is interrupted 3 times during 5 minutes. (interruption time is 30 seconds each time)
- The time of 5 minutes may be exceeded if the equipment under test needs a longer time for start up, e.g. booting sequence. For equipment which requires booting, one additional power supply interruption during booting to be performed
· Check the possible corruption of programme or data held in programmable electronic systems (where applicable)</td><td>· The equipment operates satisfactory without manual calibration after restoration of the electrical power supply.</td></tr>
<tr><td>4</td><td>Electrical power supply variation test</td><td>· Check the operation of the equipment when the electrical power supply varies as shown in the following
AC supply
<table>
<tr><th>Combination</th><th>Voltage variation permanent (%)</th><th>Frequency variation permanent (%)</th></tr>
<tr><td>1</td><td>+6</td><td>+5</td></tr>
<tr><td>2</td><td>+6</td><td>-5</td></tr>
<tr><td>3</td><td>-10</td><td>-5</td></tr>
<tr><td>4</td><td>-10</td><td>+5</td></tr>
<tr><td></td><td>voltage transient (%)</td><td>frequency transient (%)</td></tr>
<tr><td></td><td>1.5 sec</td><td>5 sec</td></tr>
<tr><td>5</td><td>+20</td><td>+10</td></tr>
<tr><td>6</td><td>-20</td><td>-10</td></tr>
</table>
DC supply
<table>
<tr><td rowspan="3">For the equipment not related to a battery (%)</td><td>Voltage tolerance continuous</td><td>±10</td></tr>
<tr><td>Voltage cyclic variation</td><td>5</td></tr>
<tr><td>Voltage ripple</td><td>10</td></tr>
<tr><td rowspan="2">For the equipment related to a battery (%)</td><td>For the equipment connected to a battery during charging</td><td>-25 ~ +30</td></tr>
<tr><td>For the equipment not connected to a battery during charging</td><td>-25 ~ +20</td></tr>
</table></td><td>· No abnormality is observed.
· The equipment operates satisfactory.</td></tr>
</table>

Table 3.23.1 Environmental Test Items, Testing Conditions and Methods, and Criteria

No.	Test item	testing condition and method	Criteria
5	Power supply variation test	· Check the operation of the equipment when the pneumatic and the hydraulic power supplies are maintained continuously +20 % and -20 % of the working pressure for at least 15 minutes.	· No abnormality is observed. · The equipment operates satisfactory.
6	Dry heat test	· The test shall be carried out at 25 ±2 ℃ in atmospheric temperature. · The absolute humidity shall not exceed 20 g of water vapor per cubic meter of air(corresponding approximately to 50 % relative humidity at 35℃). · Test A : The equipment is at an operating condition and apply the environmental condition of +70 ±2 ℃ for 16 hours. · Test B : For the equipment installed in air conditioned spaces, the environmental condition of +55 ±2 ℃ for 16 hours may be applied. Where the equipment is attached with other equipments in the console and housing, test A is to be performed. · The operation of the equipment during conditioning and testing is to be checked and functional test carry out during the last 1 hour at the test temperature. · For equipment specified for increased temperature, the dry heat test is to be conducted at the agreed test temperature and duration. · Detailed test methods are referred to Test Bb or Test Bd of IEC 60068-2-2. 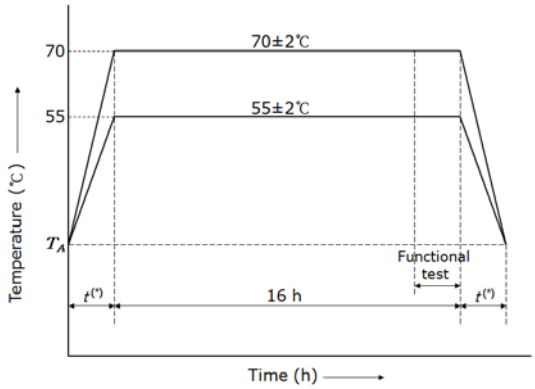 Note (*) Raising and lowering rate of temperature is to be within 1°C/min.(mean value for a period within 5 minutes **Fig 3.23.1 Program of dry heat test**	· No abnormality is observed. · The equipment is comply with the requirements of performance test and functional test.
7	Damp heat test	- The test shall start with 25 ±3 ℃ in atmospheric temperature and at least 95 % humidity. - The temperature in the chamber shall be continuously raised to 55 ±2 ℃ during 3h±30 min. During this period, the relative humidity shall be not less than 95 %, except during the last 15min when it shall be not less than 90 %. (see **Fig 3.23.2**) - The temperature shall then be maintained 55 ±2 ℃ until 12h ±30 min from the start of the cycle. During this period, the relative humidity shall be 93±3%, except for the first and last 15 min when it shall be between 90% and 100%. - 2 cycles shall be carried out as shown in **Fig 3.10.2**. The equipment is kept under operating condition during complete 1st cycle and switched off during 2nd cycle except for the operation test. And functional test is to be carried out during the first 2 hours of the 1st cycle at the environmental condition, during the last 2 hours of 2nd cycle at the environmental condition and after recovery. And duration of the second cycle can be extended due to more convenient handling of the functional test.	· No abnormality is observed. · The equipment is comply with the requirements of performance test and functional test.

Table 3.23.1 Environmental Test Items, Testing Conditions and Methods, and Criteria (continued)

No.	Test item	Testing condition and method	Criteria
7	Damp heat test	- Insulation resistance measurements are carried out before and after test. - Detailed test methods are referred to Test Db of **IEC 60068-2-30.** 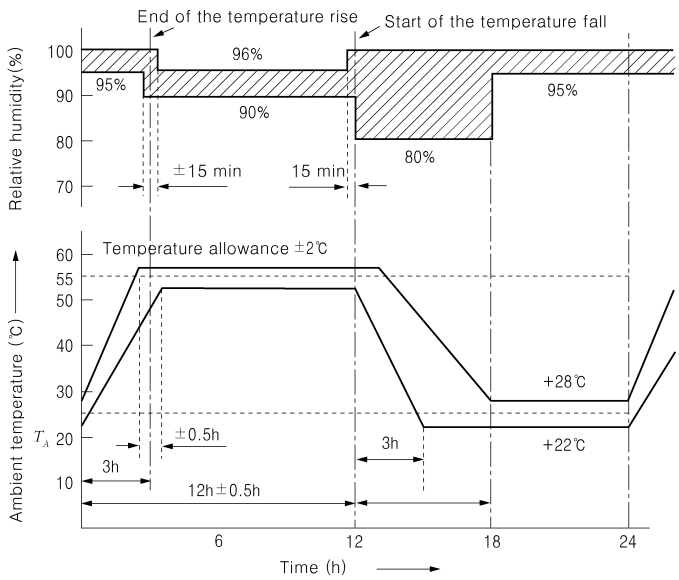 **Fig 3.23.2 Program of damp heat test**	· No abnormality is observed. · The equipment is comply with the requirements of performance test and functional test.
8	Vibration test	· The equipment is at an operating condition and apply the sweeping of vibration specified in the following over the frequency range of 2(+3, -0) Hz ~ 100 Hz in order to find resonance points.(points of which amplification factor : Q≥2 are considered resonance points.) Frequency | Amplitude or Acceleration 2(+3, -0) ~ 13.2 Hz | Amplitude ±1.0 mm 13.2 ~ 100 Hz | Acceleration ±0.7 g · When resonance points do not exist, apply the vibration of acceleration ±0.7 g at 30 Hz for 90 minutes as an endurance test. · When resonance points exist, repeat the test with necessary provisions to avoid resonance or apply the vibration (same amplitude or acceleration of resonance point) at the resonance frequency for 90 minutes as an endurance test. However, where sweep test is to be carried out instead of the discrete frequency test and a number of resonant frequencies is detected close to each other, duration of the test is to be 120 min. · Sweep over a restricted frequency range between 0.8 and 1.2 times the critical frequencies can be used where appropriate. Critical frequency is a frequency at which the equipment being tested may exhibit: - malfunction and/or performance deterioration - mechanical resonances and/or other response effects occur, e.g. chatter · during the vibration test, functional tests are to be carried out;	· No abnormality is observed. · The equipment is comply with the requirements of performance test and functional test.

Table 3.23.1 Environmental Test Items, Testing Conditions and Methods, and Criteria (continued)

<table>
<tr><th>No.</th><th>Test item</th><th>Testing condition and method</th><th>Criteria</th></tr>
<tr><td>8</td><td>Vibration test (continued)</td><td>· The test is carried out in three axis direction.
· It is recommended as guidance that Q does not exceed 5.
· For the equipment intended to be installed in severe vibration conditions such as diesel engines, air compressors, the vibration level specified in the following is applied.
<table>
<tr><th>Frequency</th><th>Amplitude or Acceleration</th></tr>
<tr><td>2(+3, -0) ~ 25.0 Hz</td><td>Amplitude ±1.6 mm</td></tr>
<tr><td>25.0 ~ 100 Hz</td><td>Acceleration ±4.0 g</td></tr>
</table>
· More severe conditions may exist for example on exhaust manifolds or fuel oil injection systems of diesel engines. For equipment specified for increased vibration levels the vibration test is to be conducted at the agreed vibration level, frequency range and duration. Values may be required to be in these cases 40 Hz to 2000 Hz- acceleration ±10.0 g at 600 ℃ duration 90 minutes.
· Detailed test methods are referred to Test Fc of **IEC 60068-2-6.**</td><td>· No abnormality is observed.
· The equipment is comply with the requirements of performance test and functional test.</td></tr>
<tr><td>9</td><td>Inclination test</td><td>· The equipment is at an operating condition and check the operation of the equipment with 22.5° static inclination.
· The equipment is at an operating condition and check the operation of the equipment with rolling of 22.5° at period of about 10 seconds for not less than 15 min.
· The test is carried out in three axis directions.
· These inclination tests are normally not required for equipment with no moving parts.
· Detailed test methods are referred to **IEC 60092-504.**</td><td>· No abnormality is observed.
· The equipment operates satisfactory.</td></tr>
<tr><td>10</td><td>Insulation resistance test</td><td>· Measure the insulation resistance between current carrying parts and between current parts and earth when measured with the following application voltage.
<table>
<tr><th>Rated voltage : Un(V)</th><th>Test voltage(D.C. voltage)(V)</th></tr>
<tr><td>Un ≤ 65</td><td>2 × Un, min. 24</td></tr>
<tr><td>Un > 65</td><td>500</td></tr>
</table>
· Measurements are carried out before and after; other series of environmental tests, damp heat test, cold test and salt mist test.
· For the equipment containing circuits in which the application of the test voltage is not desirable, the test voltage is applied after removing the circuits.</td><td>· The insulation resistance (MΩ) is not less than the value specified in the following.
<table>
<tr><th>Rated voltage</th><th>Before test</th><th>After test</th></tr>
<tr><td>Un≤65</td><td>10</td><td>1.0</td></tr>
<tr><td>Un>65</td><td>100</td><td>10</td></tr>
</table></td></tr>
<tr><td>11</td><td>High voltage test</td><td>· Apply the following test voltage, alternating of a frequency of 50 Hz or 60 Hz, between current carrying parts and between current-carrying parts connected and earth for 1 minute.
<table>
<tr><th>Rated voltage : Un(V)</th><th>Test voltage(V)</th></tr>
<tr><td>Un ≤ 65</td><td>2 × Un + 500</td></tr>
<tr><td>65 < Un ≤ 250</td><td>1,500</td></tr>
<tr><td>250 < Un ≤ 500</td><td>2,000</td></tr>
<tr><td>500 < Un ≤ 690</td><td>2,500</td></tr>
</table>
· For the equipment containing circuits in which the application of the test voltage is not desirable, the test voltage is applied after removing the circuits.</td><td>· No abnormality is observed.</td></tr>
</table>

Table 3.23.1 Environmental Test Items, Testing Conditions and Methods, and Criteria (continued)

No.	Test item	Testing condition and method	Criteria
12	Cold test	· The test shall be carried out at 25 ±10 ℃ in atmospheric temperature. · The equipment is switched off except for the operation test and apply the environmental condition of +5 ±3 ℃ for 2 hours. And functional test is to be carried out during the last hour at the test temperature and after recovery. · For the equipment installed in open decks, etc., the environmental condition of -25 ±3 ℃ is applied for 2 hours. · Insulation resistance measurements are carried out before and after cold test. · Detailed test methods are referred to Test Ab or Test Ad of **60068-2-1.** 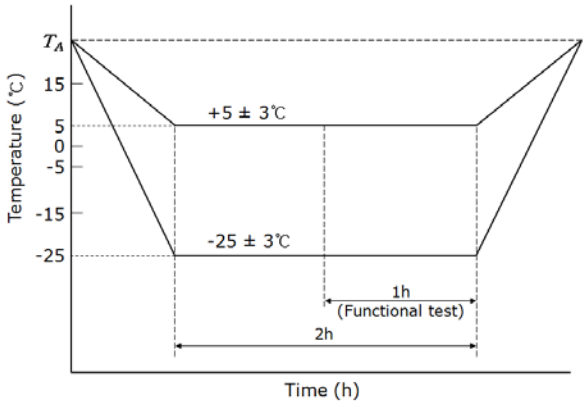 **Fig 3.23.3 Program of cold test**	· No abnormality is observed. · The equipment is comply with the requirements of performance test and functional test.
13	Salt mist test[(2)]	· Salt mist test is to be carried out for equipment installed in weather exposed areas. · The equipment is switched off except when its operation is checked. Apply four cycles of the environmental condition of spraying NaCl liquid (saline solution, 5 % NaCl, pH 6.5 ~ 7.2, 20 ±2 ℃) for 2 hours and leaving for 7 days. Check the operation of the equipment during the 7th day of each cycle and after recovery. · Damp chamber conditions for storage are to be maintained as follows; - Temp. : 40℃±2℃ - Relative humidity : 93% +2% -3% · The test is carried out according to the following procedure - Insulation resistance and functional test before test - Functional test on the 7th day of each cycle period - Insulation resistance and functional test : 4 to 6 hours after recovery · On completion of exposure, the equipment is to be examined to verify that deterioration or corrosion (if any) is superficial in nature. · Detailed test methods are referred to Test Kb of **IEC 60068-2-52.**	· No abnormality is observed. · The equipment is comply with the requirements of performance test and functional test.

Table 3.23.1 Environmental Test Items, Testing Conditions and Methods, and Criteria (continued)

<table>
<tr><th>No.</th><th>Test item</th><th>Testing condition and method</th><th>Criteria</th></tr>
<tr><td>14</td><td>Electrostatic discharge immunity test</td><td>· Check the operation of the equipment when the electrostatic discharge immunity test is carried out according to the following condition.
<table>
<tr><td>Contact discharge</td><td>6 kV</td></tr>
<tr><td>Air discharge</td><td>2 kV, 4 kV, 8 kV</td></tr>
<tr><td>Interval between single discharge</td><td>1 sec.</td></tr>
<tr><td>No. of Pulses</td><td>10 per polarity</td></tr>
</table>
· The test is to be confined to the points and surfaces that can normally be reached by the operator.
· Detailed test methods are referred to Test level 3 of IEC 61000-4-2.</td><td>· Performance Criterion B(1)</td></tr>
<tr><td>15</td><td>Radiated radio frequency immunity test</td><td>· Check the operation of the equipment when the radiated radio frequency immunity test is carried out according to the following condition.
<table>
<tr><td>Frequency range</td><td>80 MHz ~ 2 GHz</td></tr>
<tr><td>Modulation</td><td>80 % AM at 1,000 Hz</td></tr>
<tr><td>Field strength</td><td>10 V/m</td></tr>
<tr><td>Frequency sweep rate</td><td>$\leq 1.5 \times 10^{-3}$ decades/sec.
(or 1 %/3 sec.)</td></tr>
</table>
· If for tests of equipment an input signal with a modulation frequency of 1,000 Hz is necessary, a modulation frequency(80 % AM) of 400 Hz may be chosen.
· The test is to be confined to the appliances exposed to direct radiation by transmitters at their place of installation.
· Detailed test methods are referred to Test level 3 of IEC 61000-4-3.</td><td>· Performance Criterion A(2)</td></tr>
<tr><td>16</td><td>Conducted low frequency immunity test</td><td>· Check the operation of the equipment when the conducted low frequency immunity test is carried out according to the following condition. (values in round brackets are shown where the rated frequency of the equipment is 50 Hz)
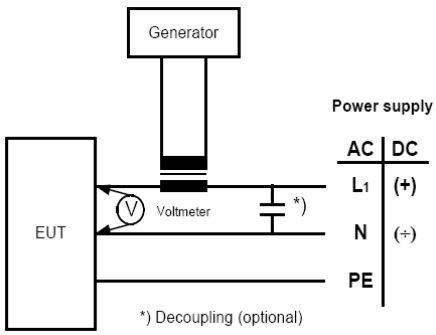

Fig 3.23.4 Test Set-up - Conducted Low Frequency Test</td><td>· Performance Criterion A(2)</td></tr>
</table>

Table 3.23.1 Environmental Test Items, Testing Conditions and Methods, and Criteria (continued)

<table>
<tr><th>No.</th><th>Test item</th><th>Testing condition and method</th><th>Criteria</th></tr>
<tr><td>16</td><td>Conducted low frequency immunity test</td><td>
<table>
<tr><td>Frequency range</td><td colspan="3">60 Hz~12 kHz
(50 Hz~10 kHz)</td></tr>
<tr><td rowspan="4">Test voltage</td><td rowspan="3">AC</td><td>10 % of supply voltage</td><td>60 Hz~900 Hz
(50 Hz~750 Hz)</td></tr>
<tr><td>10 % to 1 % of supply voltage</td><td>900 Hz~6 Hz
(750 Hz~5 kHz)</td></tr>
<tr><td>1 % of supply voltage</td><td>6 kHz~12 kHz
(5 kHz~10 kHz)</td></tr>
<tr><td>DC</td><td>10 % of supply voltage
(at least 3 V)</td><td>50 Hz~10 kHz</td></tr>
<tr><td rowspan="2">Maximum power</td><td>AC</td><td colspan="2">min 3 V r.m.s, max 2 W.</td></tr>
<tr><td>DC</td><td colspan="2">2 W</td></tr>
</table>
· For keeping max. 2 W, the voltage of the test signal may be lower.
· In case of marine navigational and radiocommunication equipment and systems, this test can be exempted.
</td><td>· Performance Criterion A(2)</td></tr>
<tr><td>17</td><td>Conducted high frequency immunity test</td><td>
· Check the operation of the equipment when the conducted high frequency immunity test is carried out according to the following condition.
<table>
<tr><td>Frequency range</td><td>150 kHz ~ 80 MHz</td></tr>
<tr><td>Modulation</td><td>80 % AM at 1,000 Hz</td></tr>
<tr><td>Amplitude</td><td>3 Vrms</td></tr>
<tr><td>Frequency sweep rate</td><td>≤1.5 × 10^{-3} decades/sec.
(or 1 %/3 sec.)</td></tr>
</table>
· If for tests of equipment an input signal with a modulation frequency of 1 kHz is necessary a modulation frequency(80 % AM) of 400 Hz should be chosen.
· Detailed test methods are referred to Test level 2 of **IEC 61000-4-6.**
</td><td>· Performance Criterion A(2)</td></tr>
<tr><td>18</td><td>Electrical fast transients / Burst immunity test</td><td>
· Check the operation of the equipment when the electrical fast transients / burst immunity test is carried out according to the following condition.
<table>
<tr><td>Single pulse rise time</td><td>5 nS (10 ~ 90 % value)</td></tr>
<tr><td>Single pulse width</td><td>50 nS (50 % value)</td></tr>
<tr><td rowspan="2">Amplitude(peak)</td><td>line on power supply port/earth : 2 kV</td></tr>
<tr><td>line/line on I/O data control and signal lines : 1 kV</td></tr>
<tr><td>Pulse period</td><td>300 mS</td></tr>
<tr><td>Burst duration</td><td>15 mS</td></tr>
<tr><td>Duration</td><td>5 min./polarity</td></tr>
</table>
· Detailed test methods are referred to Test level 3 of **IEC 61000-4-4.**
</td><td>· Performance Criterion B(1)</td></tr>
</table>

Table 3.23.1 Environmental Test Items, Testing Conditions and Methods, and Criteria (continued)

<table>
<tr><th>No.</th><th>Test item</th><th>Testing condition and method</th><th>Criteria</th></tr>
<tr><td>19</td><td>Surge immunity test</td><td>· Check the operation of the equipment when the surge immunity test is carried out according to the following condition.
<table>
<tr><th colspan="3">Test applicable to AC and DC power ports</th></tr>
<tr><td rowspan="3">Open-circuit voltage</td><td>Pulse rise time</td><td>1.2 μs(front time)</td></tr>
<tr><td>Pulse width</td><td>50 μs(time to half value)</td></tr>
<tr><td rowspan="2">Amplitude(peak)</td><td>line/earth :1 kV</td></tr>
<tr><td>line/line : 0.5 kV</td></tr>
<tr><td rowspan="2">Short-circuit current</td><td>Pulse rise time</td><td>8 μs(front time)</td></tr>
<tr><td>Pulse width</td><td>20 μs(time to half value)</td></tr>
<tr><td colspan="2">Repetition rate</td><td>at least 1 pulse/min.</td></tr>
<tr><td colspan="2">No. of pulse</td><td>5 per polarity</td></tr>
</table>
· Detailed test methods are referred to Test level 2 of IEC 61000-4-5.</td><td>· Performance Criterion B[(2)]</td></tr>
<tr><td>20</td><td>Radiated emission test</td><td>· Radiated emission test is to be carried out according to the following.
<table>
<tr><th colspan="2">For equipment installed in the bridge and deck zone.</th></tr>
<tr><th>Frequency range</th><th>Quasi peak limits</th></tr>
<tr><td>150 kHz~ 300 kHz</td><td>80 ~ 52 dBμV/m</td></tr>
<tr><td>300 kHz ~ 30 MHz</td><td>52 ~ 34 dBμV/m</td></tr>
<tr><td>30 MHz ~ 2,000 MHz</td><td>54 dBμV/m</td></tr>
<tr><td>156 MHz ~ 165 MHz</td><td>24 dBμV/m</td></tr>
</table>
<table>
<tr><th colspan="2">For equipment installed in a zone other than bridge and deck zone</th></tr>
<tr><th>Frequency range</th><th>Quasi peak limits</th></tr>
<tr><td>150 kHz ~ 30 MHz</td><td>80~50 dBμV/m</td></tr>
<tr><td>30 MHz~100 MHz</td><td>60~54 dBμV/m</td></tr>
<tr><td>100 MHz~2,000 MHz</td><td>54 dBμV/m</td></tr>
<tr><td>156 MHz~165 MHz</td><td>24 ddBμV/m</td></tr>
</table>
· Distance between equipment and antenna is to be 3 m.
· Alternatively the radiation limit at a distance of 3 m from the enclosure port over the frequency 156 MHz to 165 MHz is to be 30 dBμV/m peak.
· Detailed test methods are referred to CISPR 16-2-3</td><td>· Radiated emission is to be within limits in the table.</td></tr>
<tr><td>21</td><td>Conducted emission test</td><td>· Conducted emission test is to be carried out according to the following.
<table>
<tr><th colspan="2">For equipment installed in the bridge and deck zone.</th></tr>
<tr><th>Frequency range</th><th>Limits</th></tr>
<tr><td>10 kHz ~ 150 kHz</td><td>96 ~ 50 dBμV</td></tr>
<tr><td>150 kHz ~ 350 kHz</td><td>60 ~ 50 dBμV</td></tr>
<tr><td>350 kHz ~ 30 MHz</td><td>50 dBμV</td></tr>
<tr><th colspan="2">For equipment installed in a zone other than bridge and deck zone</th></tr>
<tr><th>Frequency range</th><th>Limits</th></tr>
<tr><td>10 kHz ~ 150 kHz</td><td>120 ~ 69 dBμV</td></tr>
<tr><td>150 kHz ~ 500 kHz</td><td>79 dBμV</td></tr>
<tr><td>500 kHz ~ 30 MHz</td><td>73 dBμV</td></tr>
</table>
· Test applicable to AC and DC power ports.
· Detailed test methods are referred to CISPR 16-2-1</td><td>· Conducted emission is to be within limits in the table.</td></tr>
</table>

Table 3.23.1 Environmental Test Items, Testing Conditions and Methods, and Criteria (continued)

<table>
<tr><th>No.</th><th>Test item</th><th>Testing condition and method</th><th>Criteria</th></tr>
<tr><td>22</td><td>Flame resistance test</td><td>· Flame resistance test is to be carried out according to the following condition.
<table><tr><td>Flame application</td><td>5 times 15 sec. each</td></tr><tr><td>Interval between each application</td><td>15 sec. or 1 time 30 sec.</td></tr></table>· The test is performed with the EUT or housing of the EUT applying needle-flame test method.
· Detailed test methods are referred to IEC 60092-101 or IEC 60695-11-5</td><td>- The burnt out or damaged part of the specimen by not more than 60 mm long.
- No flame, no incandescence or
- In the event of a flame or incandescence being present, it shall extinguish itself within 30 s of the removal of the needle flame without full combustion of the test specimen.
- Any dripping material shall extinguish itself in such a way as not to ignite a wrapping tissue. The drip height is 200 mm ± 5 mm.</td></tr>
<tr><td>23</td><td>Pressure test</td><td>· Apply the pneumatic or hydraulic pressure of 1.5 times the designed pressure.</td><td>· No abnormality is observed.</td></tr>
<tr><td colspan="4">(Note)
(1) Performance Criterion B: The Equipment Under Test is to continue to operate as intended after the tests. No degradation of performance or loss of function is allowed as defined in the technical specification published by the manufacturer. During the test, degradation or loss of function or performance which is self recoverable is however allowed but no change of actual operating state or stored data is allowed.
(2) Performance Criterion A: The EUT is to continue to operate as intended during and after the test. No degradation of performance or loss of function is allowed as defined in the technical specification published by the manufacturer.</td></tr>
</table>

Section 24 Equipment related to Ventilation Systems in Oil Tankers

2401. General

1. Application

The requirements of this Section apply to tests and inspection for the type approval of equipment related to ventilation systems in oil tankers in accordance with the requirements in **Pt 7, Ch 1, 1004.** and **Pt 7, Ch 6, Sec 8** of the Rules.

2. Definitions

The terms used in this Section are defined as follows:

(1) **PV valve** is a device designed to maintain pressure and vacuum in a closed container within preset in limit conformity.

(2) **Flame screen** is a device utilizing wire mesh to prevent the passage of unconfined flames in conformity.

(3) **Flame arrester** is a device to prevent the passage of flame by elements based on the principle of quenching in conformity.

(4) **Detonation flame arrester** is a device to prevent the passage of flame generated in association with a detonation in the line pipe in conformity.

(5) **High velocity device** is a device to prevent the passage of flame consisting of a mechanical valve which adjust the opening available for flow in accordance with the pressure at inlet of the valve in such a way that the efflux velocity can not be less than 30 m/s in conformity.

(6) **Flame speed** is the speed at which a flame propagates along a pipe or the other system.

(7) **Flashback** is the transmission of a flame through a device.

(8) **High level alarm system** is a device which alarms of excessive rises in the liquid cargo level to guard liquid rising in the venting system to the height which would exceed the designed head of cargo tanks in conformity.

(9) **Pressure monitoring system** is a device to prevent over-pressure and or under-pressure during cargo loading and ballasting or discharging operations, and to monitor the tank pressure and to actuate an alarm when the tank pressure reaches to a set pressure.

2402. PV Valve

1. Materials and construction

Materials and construction of PV valve are to comply with the requirements given in **Table 3.24.1**

Table 3.24.1 Materials and construction of PV valve

Kinds	Requirements
Materials	(A) The device housing, and other parts or bolted used for pressure retention, shall be constructed of materials suitable for the intended service and listed in a recognized national or international standard. (B) Housings, discs, spindles, seals, springs, gaskets, seals and all other integral parts, including parts with coatings to prevent corrosion, shall be made of materials resistant to attack by seawater and the liquids and vapours contained in the tank being protected. (C) Springs plated with corrosion-resistant material are not acceptable. (D) Non-metallic materials, other than gaskets and seals, shall not be used in the construction of pressure-retaining components of the device. (E) Resilient seals may be installed only if the device is still capable of effectively performing its function when the seals are partially or completely damaged or burned. (F) Non-metallic gaskets shall be made of non-combustible material suitable for the service intended. (G) Materials for connecting pressure/vacuum valves to their respective piping systems to which they are connected. (H) The materials for all parts not identified above shall be suitable for their intended purpose. (I) The possibility of galvanic corrosion shall be considered in the selection of materials.
Structure	(A) Device housings shall be gastight in the primary pressure zone upstream of the main valve seat to prevent the escape of vapours.

Table 3.24.1 Materials and construction of PV valve (continued)

Kinds	Requirements
Structure	(B) Housings, elements and seal gasket materials shall be capable of withstanding of the maximum and minimum pressures and temperatures to which the device may be exposed under normal operating conditions and shall be capable of withstanding the hydrostatic pressure specified in **Table 3.24.2** of **2402. 2.** (C) Where welded construction is used for pressure-retaining components, welded-joint design details, welding and welders shall be in accordance with the relevant Rules of **Pt 2.** and appropriate non-destructive testing shall be carried out. (D) When pressure/vacuum valves are designed to allow for inspection, cleaning, repair or removal of internal elements for replacement without removing the entire device form th system, the design shall not allow the valve to be incorrectly reassembled following disassembly for inspection, cleaning or repair. (E) Pressure/vacuum valves shall be designed such that condensed vapour drains from the device and does not impair the efficiency of the device. The design shall also prevent the accumulation of water inside the device and subsequent blockage due to freezing. (F) Where design does not permit complete drainage of condensed vapours through its connection to the tank, the housing shall be fitted with a plugged drain opening on the side of the atmospheric outlet of not less than 13 mm. The drain shall not allow vapour to escape unless the drain is equipped with suitable means to prevent the passage of flame and meets all requirements for efflux velocity and direction. (G) All fastenings essential to the operation of the device shall be protected against loosening. (H) Devices shall be designed and constructed to minimize the effect of fouling under normal operating conditions. The design shall be such that the device can be examined for any build-up of residue due to vapour condensation that might impair the operation of the device. (I) Devices shall be capable of operating over the full range of ambient temperatures anticipated. Devices shall also be capable of operating in freezing conditions and when covered by a layer of ice, the allowed thickness of which shall be stated by the manufacturer in the operating manual. Devices shall be capable of operating at whatever surface temperature is developed by heating arrangements. (J) End-of-line devices shall be constructed to direct the efflux vertically upward under all flow rates. (K) A manual means shall be provided to verify that valve lifts easily and cannot remain in the open position. (L) Valve discs shall be guided by a suitable means to prevent binding and ensure proper self-closing (seating), taking into account the possible build-up of condensed vapours passing through the valve during loading, when maintenance is carried out in accordance with the manufacturer's requirements. Valve discs shall normally close against the valve seat by metal-to-metal contact. Resilient-seating seals may be provided in the design is such that the disc closed tight against the seat in case the seals are destroyed, damaged or otherwise carried away. Valve discs may be solid or made hollow so that weight material may be added to vary the lifting pressure. If hollow discs are employed, a watertight bolted cover shall be fitted to encase the weight material. The lifting pressure shall not be varied by personnel other than the manufacturer without prior approval by the administration. A clear indication, visible from the outside of the valve, shall be employed to indicate the position of the valve. (M) Valves may be actuated by non-metallic diaphragms except where failure would result in unrestricted flow of tank vapours to the atmosphere or in an increase in the pressure or vacuum at which the valve normally releases (N) Relief pressure adjusted mechanisms shall be permanently secured by lockwire, locknuts or other suitable means to prevent devices from becoming misadjusted due to handling, installation or vibration.

2. Type tests

(1) Test product
The test products used in the type test are to be of each configuration and dimension given in the application.

(2) Details of tests and examinations
Type test and inspection of PV valve are to be in accordance with the requirements given in **Table 3.24.2**

Table 3.24.2 Type test and inspection of PV valve

Test item	Test method
Construction inspection	The materials, construction and dimension of the device shall be confirmed.
Corrosion test	A corrosion test shall be conducted. In this test, a complete device, including a section of pipe similar to that to which the device will be fitted, shall be exposed to a 5 % sodium chloride solution spray at a temperature of 25℃(41°F) for a period of 240 h, and allowed to dry for 48 h. Following this exposure, all movable parts shall operate properly and there shall be no corrosion deposits that cannot be washed off.
Hydrostatic pressure test	The pressure-retaining boundary of the device shall be subjected to a hydrostatic-pressure test of at least 150 % of maximum rated pressure(MRP) or a minimum pressure of 345 kPa gauge (50psig), whichever is greater, for ten minutes without rupturing, leaking or showing permanent distortion.
Performance characteristics	Performance characteristics as declared by the manufacturer, such as flow under both positive and negative pressures, operating sensitivity flow resistance and velocity, shall be demonstrated by appropriate tests. Flow testing shall be conducted in accordance with the flow test below.
Pneumatic test	Each finished device shall be pneumatically tested at 70 kPa either using a submersion test or a soap test for a duration of three minutes to ensure there is no leakage.
Flow tests	(a) The capacity data shall be presented in the form of curves or tables that give the volume of flow through both vacuum and pressure ports and that cover the full range between the opening pressure (or vacuum) and the pressure(or vacuum) at which the ports are fully open and the valve is flowing at its maximum anticipated rate. The capacity data for pilot-operated vents or devices that open fully at a set pressure (or vacuum) may be expressed as a flow coefficient that is the ratio of the flow through the vent to the flow through a theoretically perfect nozzle of the same diameter. Sufficient measurements shall be made a t pressures in the vicinity of the opening points, particularly at 1.1, 1.2 and 1.5 times the opening pressure and at 1.5 and 2.0 times the opening point on vacuum, to establish clearly the flow capacity at these points. (b) The capacity data shall indicate the points of initial opening and final closing of the venting device. (c) The capacity data shall be expressed in terms of cubic metres of air per hour at a temperature of 0℃ and a pressure of 1,015 hPa (d) Pressures shall be expressed in hectopascals, however, auxiliary scales shall be expressed in millimeters of water, and other units of measurement may also be included if desired. 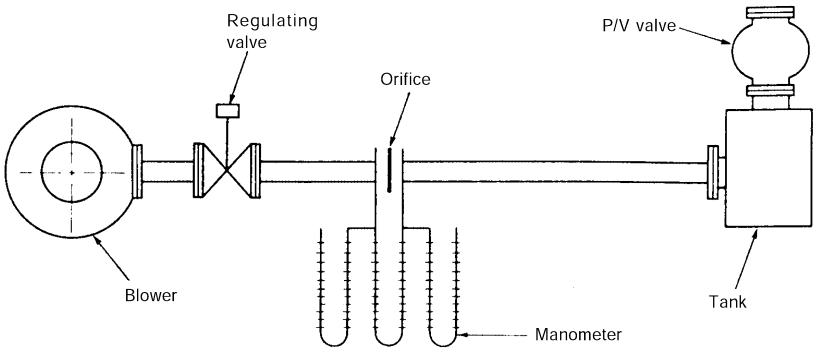 **Fig 3.24.1 Example of Testing Equipment for PV Valve**

2403. Devices to Prevent the Passage of Flame

1. General

(1) Materials and strength, construction and dimension, and tests and inspections of a flame screen, a flame arrester, a detonation flame arresters and a high velocity vent are to be in accordance with the requirements in the following **2** through **3**.

(2) For flame screens, after carrying out a corrosion test and a hydraulic test, a flashback test and a general inspection are to be carried out. The test component is not to be exchanged for each test requested and is to have the most inappropriate gap dimension expected in the service of the product. An example of testing equipment for the flashback test is shown in **Fig 3.24.2.**

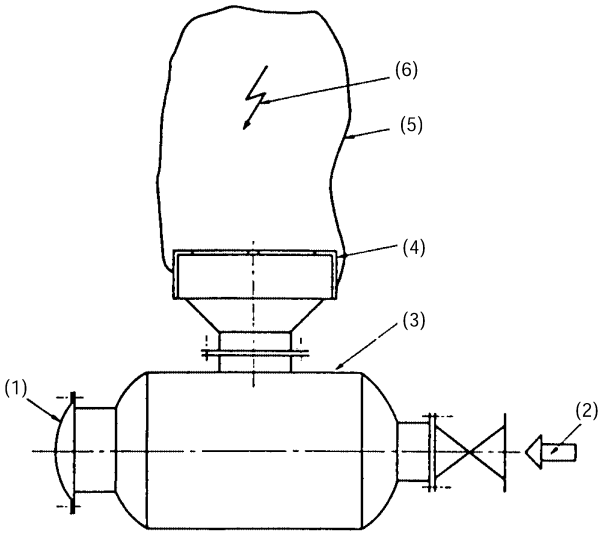

(1) Diaphragm (2) Explosive vapour-air mixture inlet
(3) Tank (4) Flame arrester
(5) Plastic bag (ordinary circumference 2 *m*, length 2.5 *m* and thickness 0.05 *mm*)
(6) Ignition device
*For information about explosive vapour mixture, refer to *IEC* 60079-1

Fig 3.24.2 Example of Testing Equipment for Flame Arrester

(3) For flame arresters, after carrying out a corrosion test and a hydraulic test, a flashback test, an endurance burning test and a general inspection are to be carried out.
(4) For detonation flame arresters, after carrying out a corrosion test and a hydraulic test, a detonation test, an endurance burning test and a general inspection are to be carried out. The test component is not to be exchanged for each test requested and is to have the most inappropriate gap dimension expected in the service of the product. An example of testing equipment for the detonation test is shown in **Fig 3.24.3**

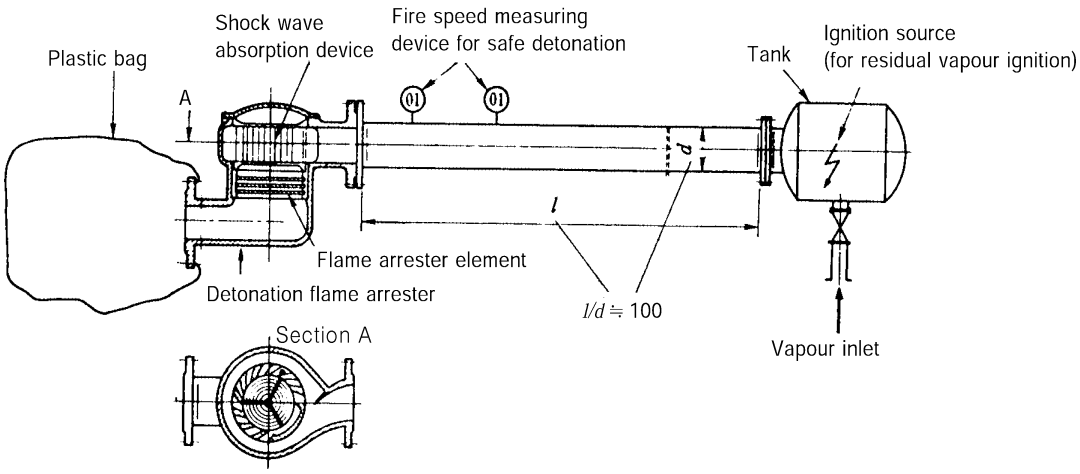

Fig 3.24.3 Example of Testing Equipment for Detonation Flame Arrester

(5) For high velocity devices, after carrying out a corrosion test and a hydraulic test, a flow volume test, a flashback test, an endurance burning test and a general inspection are to be carried out. The test component is not to be exchanged for each test requested and is to have the most inappropriate gap dimension expected in the service of the product. Examples of testing equipment for the flashback test, and the flow volume test and the endurance burning test are shown in **Fig 3.24.4.**

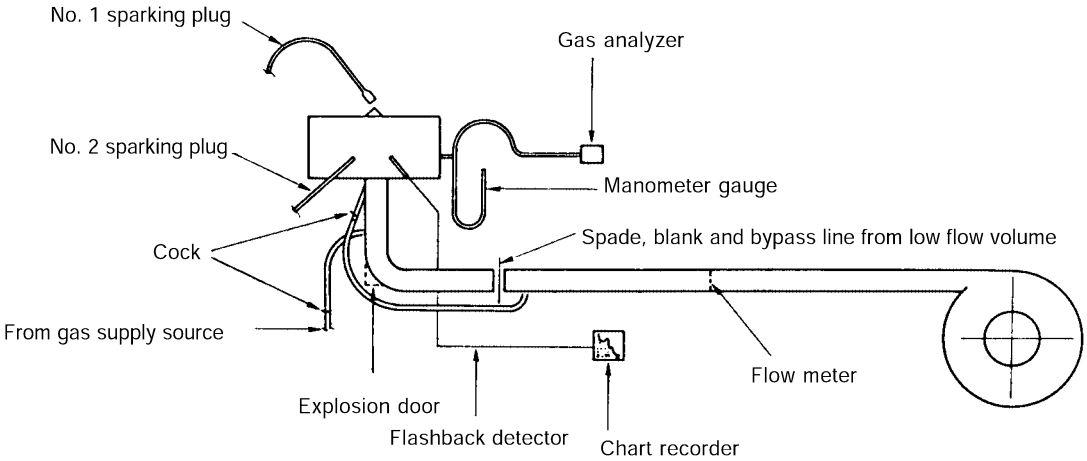

Fig 3.24.4 Example of Testing Equipment for High Speed Discharger(For flashback test)

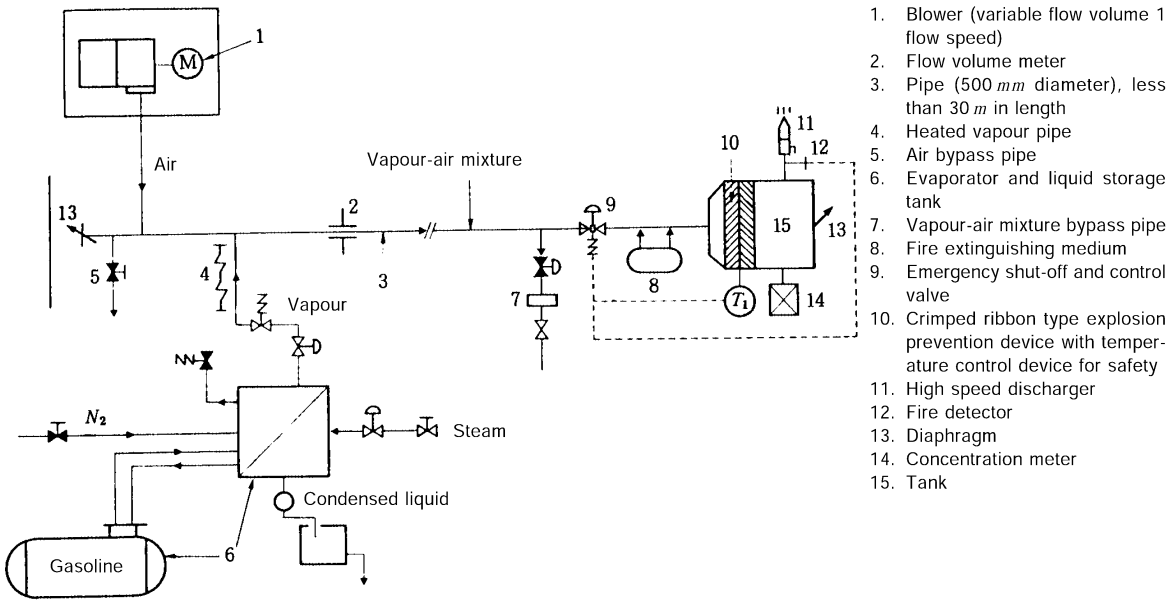

Fig 3.24.5 Example of Testing Equipment for High Speed Discharger

2. Materials and structure

Materials and structure of a flame screen, a flame arrester, a detonation flame arresters and a high velocity vent are to comply with the requirements given in **Table 3.24.3**

Table 3.24.3 Materials and structure for devices to prevent the passage of flame

Kinds		Requirements
Material		(A) The casing or housing of devices should meet similar standards of strength, heat resistance and corrosion resistance as the pipe to which they are attached. (B) Elements, gaskets and seals should be of material resistant to both seawater and the cargoes carried. (C) The casing and element and gasket materials should be capable of withstanding the highest pressure and temperature to which the device may be exposed under both normal and specified fire test conditions.
Structure	General	(a) The design of devices should allow for ease of inspection and removal of internal elements for replacement, cleaning or repair. (b) Devices should allow for efficient drainage of moisture without impairing their efficiency to prevent the passage of flame. (c) Fastenings essential to the operation of the device, i.e. screws, etc., should be protected against loosening. (d) Devices should be designed and constructed to minimize the effect of fouling under normal operating conditions. (e) All flat joints of the housing should be machined true and should provide for a joint having an adequate metal-to-metal contact. (f) Resilient seals may be installed only if their design is such that if the seals are partially or completely damaged or burned, the device is still capable of effectively preventing the passage of flame. (g) End-of-line devices should be so constructed as to direct the efflux vertically upwards. (h) Devices should be capable of operating in freezing conditions. (i) Devices are to be protected against mechanical damage. (j) Performance characteristics, such as the flow rates under both positive and negative pressure, operating sensitivity, flow resistance and velocity should be demonstrated by appropriate tests. In this case, the presence of the Surveyor may be dispensed with.
	Flame screen, flame arrester and detonation flame arrester	(a) The design of devices should allow for ease of inspection and removal of internal elements for replacement, cleaning or repair. (b) The clear area through the element is to be at least 1.5 times the cross-sectional area of the line. (c) The elements are to be secured in the casing in such a way that flame cannot pass between the element and casing.
	High velocity devices	(a) High velocity devices are to have a width of the contact area of the valve seat of at least 5 mm. (b) Means should be provided to check that any valve lifts easily without remaining in the open position. (c) In the case of high velocity vents, the possibility of inadvertent detrimental hammering.

3. Type tests

(1) Test product
The test products used in the type test are to be of each configuration and dimension given in the application.

(2) Details of test and examinations
Type test and inspection of a flame screen, a flame arrester, a detonation flame arresters and a high velocity vent are to be in accordance with the requirements given in **Table 3.24.4**

Table 3.24.4 Type test and inspection for devices to prevent the passage of flame

Kind	Test item	Test method
1. General		(a) The following characteristics should be recorded, as appropriate, throughout the tests: (i) concentration of fuel in the gas mixture (ii) temperature of the test gas mixture at inflow of the device (iii) flow rates of the test gas mixtures when applicable. (b) Flame passage should be observed by recording, e.g., temperature, pressure, or light emission by suitable sensors on the protected side of the device; alternatively, flame passage may be recorded on video tape. (c) If any device is provided with heating arrangements so that its surface temperature exceeds 85℃, then it should be tested in accordance with **2** through **6** of this **Table** at the highest operating temperature. (d) End of line devices which are intended for exclusive use at openings of inerted cargo tanks which are appropriate with the requirements of **Pt 7, Ch 1, Sec 11** of the Rules need not be tested against endurance burning In this case, flashback may be dispensed with. (e) For ships other than those, 500 GT or above, engaged in the international voyages, the continuous combustion test for flame arrests, the flash back test and the continuous combustion test for high velocity devices may be omitted. (f) After the relevant tests, the device should not show mechanical damage that affects its original performance.
2. Flame arresters located at openings to the atmosphere.	General	The test rig should consist of an apparatus producing an explosive mixture, a small tank with a diaphragm, a flanged prototype of the flame arrester, a plastic bag and a firing source in three positions. Where end-of-line devices are fitted with cowls, weather hoods and deflectors, etc., these attachments should be fitted for the tests.
	Flashback test	(i) The tank, flame arrester assembly and the plastic bag enveloping the prototype flame arrester should be filled so that this volume contains the most easily ignitable propane/air mixture. However, devices are to be tested with ethylene or test media with MESG not more than 0.65mm for Apparatus Group IIB on chemical tankers and with hydrogen or test media with MESG not more than 0.28mm for Apparatus Group IIC on chemical tankers, according to the apparatus group assigned as per column i" of **the Annex 7B-1 Table of Summary of Minimum Requirements of the Guidance Pt 7 Ch 6.** (ii) Three ignition sources should be installed along the axis of the bag, one close to the flame arrester, another as far away as possible therefrom, and the third at the midpoint between these two. (iii) These three sources should be fired in succession, twice in each of the three positions. (iv) Devices should not be capable of being bypassed or blocked open unless they are tested in the bypassed or blocked open position. (v) The temperature of the test gas should be within the range of 15℃ to 40℃.
	Endurance burning test	Following tests are to be carried out to ascertain that no flashback occurs. (i) Without the plastic bag the flame arrester is to be so installed that the mixture emission is vertical. (ii) Endurance burning is to be achieved by using the most easily ignitable gasoline vapour/air mixture with the aid of a continuously operated pilot flame. (iii) By varying the flow rate, the flame arrester is to be heated until the highest obtainable temperature on the cargo tank side is reached. This temperature is to be maintained for a period of 10 minutes, after which the flow is to be stopped and the conditions are to be observed. The highest obtainable temperature may be considered to have been reached when the rate rise of temperature does not exceed 0.5℃ per minute over a ten-minute period. If difficulty a rises in establishing stationary temperature conditions (at elevated temperatures), endurance burning, by using the flow rate which produced the maximum temperature during the foregoing test sequence, is to be continued for a period of two hours from the time the above mentioned flow rate has been established.
3. Tests for flame arresters located in-line	General	The following tests are to be carried out to ascertain that no flashback occurs. In these tests, the flame arrester is to be tested with the inclusion of all pipes, tees, bends, cowls, weather hoods, etc. which may be fitted between the device and atmosphere.
	Flashback test	A flashback test is to be carried out in accordance with **2.** of this **Table.** In this test, the plastic bag is to be fitted at the outlet to atmosphere.
	Endurance burning test	An endurance burning test is to be carried out in accordance with **2.** of this **Table.** In this test, the flame arrester is to be so installed as to reflect its final orientation.

Table 3.24.4 Type test and inspection for devices to prevent the passage of flame (continued)

Kind	Test item	Test method
4. Tests for detonation flame arresters located in-line	General	The following tests are to be carried out using the test apparatus which consists of an apparatus producing an explosive mixture, a tank, a plastic bag, a pipe of suitable length and of the same diameter as the flange of the detonation flame arrester, ignition device and a measuring instrument of flame speed , and it is to be ascertained that no flashback occurs and no part of the flame arrester is damaged or shows permanent deformation.
	Detonation test	(i) A detonation flame arrester is to be installed at one end of a pipe, and a plastic bag is to be affixed on the other end of the detonation flame arrester. (ii) The tank, the plastic bag, the pipes and the detonation flame arrester are to be filled with the most easily ignitable propane/air mixture. However, devices are to be tested with ethylene or test media with MESG not more than 0.65mm for Apparatus Group IIB on chemical tankers and with hydrogen or test media with MESG not more than 0.28mm for Apparatus Group IIC on chemical tankers, according to the apparatus group assigned as per column i" of **the Annex 7B-1 Table of Summary of Minimum Requirements of the Guidance Pt 7 Ch 6.** (iii) They are to be ignited in the tank and three detonation tests are to be carried out. The velocity of the flame measured near the detonation flame arrester is to have a value of that for stable detonations.
	Endurance burning test	In case where the distance requirement in the endurance burning test, **3.** of this **Table** cannot be met, an endurance burning test is to be carried out in addition to the requirements in the detonation test.
5. Tests for flame screens	Flashback test	A flashback test is to be carried out in accordance with **2.** or **3.** of this **Table** depending on the installed position of the flame screen.
6. Tests for high velocity devices	Flow condition test	A flow condition test is to be carried out with high velocity vents using compressed air or gas at agreed flow rates, and the following is to be measured and recorded. (i) The flow rate. Where air or gas other than vapours of cargoes with which the vent is to be used is employed in the test, the flow rates achieved are to be corrected to reflect the vapour density of such cargoes. (ii) The pressure before the vent opens. The pressure in the test tank on which the device is located is not to rise at a rate greater than 10 kPa/min. (iii) The pressure at which the vent opens. (iv) The pressure at which the vent closes. (v) The efflux velocity at the outlet which is not to be less than 30m/s at any time when the valve is open.
	Flashback test	The following tests are to be carried out using the test apparatus producing explosive mixture, flowmeter, ignition device and diaphragm, and it is to be ascertained that no flashback occurs. (i) The test rig and the high velocity device are filled with the most easily ignitable gasoline vapour, hexane vapour or propane/air mixture. The mixture is to be ignited with the aid of a permanent pilot flame at the outlet. A flashback test is to be carried out with the device in the upright position and then inclined at 10° from the vertical. For some device designs further tests with the device inclined in more than one direction may be necessary. (ii) In each of these tests specified in (i), the flow is to be reduced until the device closes and the flame is extinguished, and each is to be carried out at least 50 times.
	Endurance burning test	The following tests are to be carried out using the test apparatus producing explosive mixture, blower, tank with a diaphragm, safety device and flowmeter, and it is to be ascertained that is no flashback occurs. (i) An endurance burning test is to be carried out in accordance with **2.** of this **Table.** (ii) Following the test specified in (a), the main flame is to be extinguished and then, with the pilot flame burning or the spark igniter discharging, small quantity of the most easily ignitable mixture is to be allowed to e scape for a period of 10 minutes maintaining a pressure below the value of 90 % of the valves opening setting. (iii) For the purpose of this test, soft seals and seats a re to be removed.
7. Corrosion test		A corrosion test is to be carried out. In this test a complete device including a section of the pipe to which the device may be fitted is to be exposed to a 5 % sodium chloride solution spray at a temperature of 25℃ for a period o f 240 hours, and allowed to dry for 48 hours. Following the test all movable parts are to operate properly and there is to be no corrosion deposits which cannot be washed out. This test is to be carried out before carrying out the tests specified in **2.** through **6** of this **Table.**

Table 3.24.4 Type test and inspection for devices to prevent the passage of flame (continued)

Kind	Test item	Test method
8. Hydraulic test		For the casing of a device, a hydraulic test at the same test pressure as the pipe to which the device is attached. This test is to be carried out before carrying out the tests specified in **2.** through **6** of this **Table.** (a) End of line device of all sizes : 90 kPa (b) In-line device up to 200 mm pipe diameter : 1,500 kPa (c) In-line device above 200 mm and up to 300mm : 1,800 kPa (d) In-line device above 300 mm pipe diameter : to the satisfaction of the Society
9. Finished condition inspection		The materials, construction and dimensions of the device are to be ascertained.

2404. High level alarms

Performance, construction, tests and inspections of a high level alarm are to be in accordance with requirements given in **Table 3.24.5.**

Table 3.24.5 Performance, construction, tests and inspections of a high level alarm

Item	Requirements
Performance and construction	(A) The deviation between the indicated level and the actual one is to be within 25mm or less. (B) The liquid level can be indicated within a time lag of 3 seconds following the actual liquid level fluctuation. (C) The device is to be capable of withstanding motions, vibrations and inclinations of a ship. (D) Electrical installations of the device are to comply with the requirements in relevant Rules. (E) Due consideration is to be paid against the generation of static electricity. (F) The device is to be capable of withstanding the highest pressure and temperature to which the device may be exposed under normal condition, and is to be of material resistant both sea water and cargoes carried. (G) The construction of a device is to be in accordance with the following requirements: (a) The design is to allow for ease of repair. (b) The fastenings a re to be protected against loosening. (H) The operational error is to be demonstrated by an appropriate test. (I) The alarms are to be visible and audible, and to be capable of identifying the tank in which the liquid level rises. (J) The audible alarm is to be capable of being stopped manually.
Type tests	High level alarms are to comply with the requirements specified in **2303.** of this Guidance.

2405. Pressure monitoring system

Construction, strength, test and inspections of a pressure monitoring system are to be in accordance with the requirements given in **Table 3.24.6.**

Table 3.24.6 Construction, strength, test and inspections of a pressure monitoring system

Item	Requirements
Performance and construction	(A) A pressure monitoring system is to comply with the requirements specified in **2302.** (B) In addition to the requirements specified in (A), a pressure monitoring system is to be in accordance with followings: (a) The alarms are to be visible and audible, and to be capable of identifying the tank which is the condition of over-pressure or under-pressure. (b) The audible alarm is to be capable of being stopped manually.
Type tests	(A) The details of tests are to be in accordance with the requirements specified in **2303.** (B) In addition to the requirements specified in (A), a pressure monitoring system is to be in accordance with followings: (a) The operational errors are to be in ranges from 0 % to -10 % of the set pressure on the pressure side and from +10 % to 0 % of the set pressure on the vacuum side. (b) The pressure can be measured within a time lag of 3 seconds following the actual pressure fluctuation.

Section 25 Securing Devices

2501. Application

1. The requirements in this Section apply to tests and inspection for the type approval of securing devices, which will be approved by this Society for the safe carriage of cargoes, in accordance with the requirements in **Pt 7, Ch 4, 1002.** of the Rules, etc.

2. Raw forgings or castings are to be approved their manufacturing process by the Society in accordance with the requirements in **Pt 2, Ch. 1** of the Rule.

2502. Type tests

1. Type tests to determine the breaking or proof loads are to be carried out on at least two saples of each item used in the securing system. The relationship between minimum design breaking load and safe working load is to be as indicated in **Table 3.25.1.**

Table 3.25.1 Design Braking Loads and Proof Loads

Item			Min. design breaking load		Min. proof load	
			$SWL \leq 40$	$SWL > 40$	$SWL \leq 40$	$SWL > 40$
Lashings	Wire ripe		3 × SWL	-	-	-
	Rod	mild steel	3 × SWL		1.5 × SWL	
		higher tensile steel	2 × SWL		1.5 × SWL	
	Chain	mild steel	3 × SWL		-	
		higher tensile steel	2.5 × SWL			
Fittings and securing devices			2 × SWL	SWL+ 40 t	1.5 × SWL	SWL+ 20 t

NOTES:
1. Higher tensile steel is defined for this purpose as steel having a yield stress not less than 315 N/mm^2 (32 kg/mm^2).
2. Breaking and proof loads for lashings of material other than steel will be considered.

2. The Surveyor is to be satisfied that the design and materials of the fitting are in accordance with the approved plans. The mode of load application is to represent as closely as possible the in-service operational modes. Jigs are to be employed where necessary in order that satisfactory simulation is obtained. For guidance purposes, test modes which are required for the more commonly used fittings are shown in **Table 3.25.2.**

3. In the interests of standardization of the strength of container securing fittings and lashings, safe working loads in accordance with column **4** of **Table 3.25.2** are recommended.

4. For acceptance, no permanent deformation (other than that due to initial embedding of component parts) is to be induced by test loads up to the proof load given in **Table 3.25.1.**

5. Where one of the test samples fails before the design breaking load is reached this can be accepted, provided:

(1) The failure load is not less than 95 percent of the design breaking load.
(2) An additional sample is tested satisfactorily.
(3) The average failure load of the three samples is equal to or greater than the design breaking load.

Table 3.25.2 Test Loads and Test Modes

Item No	Description	Required test modes		Recommended minimal in tonnes		
				SWL	Proof load	Breaking load
1	Lashing rod (H.T.S)		Tensile load	25	37.5	50
2	Lashing rod (M.S)			18	27	36
3	Lashing chain (H.T.S)			10	-	30
4	Lashing chain (M.S)			8	-	20
5	Lashing steel wire rope			12	-	36
6	Turnbuckle		Tensile load	25	37.5	50
7	Twistlock (single)		Shear load	20	30	40
			Tensile load	25	37.5	50
8	Twistlock (linked)		As for item 7+ tensile load	5	7.5	10
9	Midlock		Shear load	20	30	40
			Tensile load	25	37.5	50
10	Stacker (single)		Shear load	20	30	40
11	Stacker (double)		As for item 10+ tensile load	5	7.5	10
12	Flush socket		Pull-out load	25	37.5	50
13	Pedestal socket		Pull-out load	25	37.5	50
			Tangential load	20	30	40
14	'D' ring	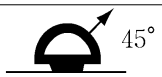	Tensile load	25	37.5	50
15	Lashing plate		Tensile load	25	37.5	50
16	Penguin hook		Tangential load	18	27	36
17	Bridge fitting		Tensile load	5	7.5	10
18	Buttress		Tensile load	See Note 5		

(Notes)
1. For items 6, 14, 15 and 16 where specially designed for use with chain or wire rope lashings a less SWL may be considered.
2. For items 8, 11 and 17 the recommended minimum loads quoted in the Table refer to the fittings when employed in a location in container stacks which do not transfer load to an adjacent slack. Where items 8, 11 and 17 are fitted in line with a buttress/shore support at stowage sides, test loads are to be determined in association with Note 5.
3. For items 12 and 13, where multiple flush sockets or pedestal sockets are involved test loads are to be applied simultaneously to each socket opening which can be loaded simultaneously in service.
4. For item 15, where multiple lashing points are fitted in one deck plate fitting, testing is to bè similarly arranged as for Note 3.
5. For item 18, test loads for buttress fittings are to be determined by detailed consideration of the individual stowage arrangement proposed in association with **Table 3.25.1**.
6. Where special containers are used consideration will be given to the required minimum loads.

Section 26 Fire Protection Materials

2601. Application

1. The requirements of this Section apply to tests and inspections for the approval of fire protection materials specified in **Table 3.26.1** according to the requirements of **Pt 8, Ch 1** of the Rules.
2. For test and inspections of “H” class divisions in accordance with the requirements of **Ch 8, 102.** of **the Guidance for Floating Production Units**, the requirements of this Section are correspondingly applied.

Table 3.26.1 Kinds and application of fire protection materials

Kinds	Application
Non-combustible materials	(1) Non-combustible materials mean the materials defined in **Pt 8, Ch 1, 103.** of the Rules. (2) The kinds of test for non-combustible materials are to be the 'Test method for non-combustible material', the procedure of which is to be as specified in **2604. 1. of this Guidance.** (3) The materials specified below are to be regraded as non-combustible materials for which no approval by the Society is required. (A) Sheet glass, glass rock, clay, ceramics, and glass fiber (B) Metals (except magnesium and magnesium alloys) (C) Sand, gravel, expanded vermiculite, slag (expanded or foam slag), diatomaceous earth, portland cement using pearlite or pumice as aggregates, gypsum, and magnesite concrete (D) Needle punched glass fiber products containing 2.5 % or less of lubricant
“H” Class divisions	(1) “H” class divisions are the divisions defined in **Pt 8, 102.** of the Guidance for Floating Production Units. They are used for bulkheads, decks, doors, cable penetrations, etc. (2) The kinds of test for “H” class divisions are to be correspondingly applied “fire tests of A class divisions," the procedures of which are to be as specified in **2604. 2.** unless stated otherwise. For fire test, Hydrocarbon fire load/temperature curve of NPD(Norwegian Petroleum Directorate) is to be used. (3) “H” class divisions are classified into three ratings according to temperature conditions: “H-120” rating, “H-60” rating and “H-0” rating. (4) The materials constituting “H” class divisions are all to be approved non-combustible materials. In applying for approval, documents proving that the constituent materials are non-combustible (the certificate of the Society or the test results recognized by the Society) are to be submitted in addition to the results of fire tests for the constituent materials.
"A" Class divisions	(1) "A" class divisions are the divisions defined in **Pt 8, Ch 1, 103.** of the Rules. They are used for bulkheads, decks, doors, cable penetrations, etc. (2) The kinds of test for “A” class divisions are to be “fire tests of A class divisions," the procedures of which are to be as specified in **2604. 2.** (3) “A“ class divisions are classified into four ratings according to temperature conditions: ”A-60“ rating, ”A-30“ rating, ”A-15“ rating and ”A-0“ rating. (4) The materials constituting “A” class divisions are all to be approved non-combustible materials. In applying for approval, documents proving that the constituent materials are non-combustible (the certificate of the Society or the test results recognized by the Society) are to be submitted in addition to the results of fire tests for the constituent materials.
"B" Class divisions	(1) **″B″ class divisions** are the divisions defined in **Pt 8, Ch 1, 103.** of the Rules. They are used for bulkheads, doors, continuous ceilings, cable penetrations, etc. (2) The kinds and procedure of tests for 'B' class divisions are to be “fire tests of B class divisions” the procedures of which are to be as specified in **2604. 2.** (3) “B“ class divisions are classified into two ratings according to temperature condition: ”B-15“ rating and ”B-0“ rating. (4) The materials constituting “B” class divisions are to be approved non-combustible materials. In applying for approval, documents proving that the constituent materials are non-combustible (the certificate of the Society or the test results recognized by the Society) are to be submitted in addition to the results of fire tests for the constituent materials.

Table 3.26.1 Kinds and application of fire protection materials (continued)

Kinds	Application
Fire retardant base materials	(1) **Fire retardant base materials** are the combustible materials used for internal divisions, and linings, draft stops, ceilings and their associated ground sills in corridors and stairway enclosures within accommodation and service spaces of a ship adopting Method ⅢC or ⅡC specified in **Pt 8, Ch 3, 103. 5** of the Rules. (2) The kinds of test for fire retardant materials are to be test for surface flammability, smoke and toxicity test, the procedures of which are to be in accordance with the requirements specified in **2604. 3** and **4,** respectively.
Fire retardant veneers	(1) **Fire retardant veneers** are the combustible veneer materials applied on internal exposed surfaces and on the surfaces in consealed or inaccessible spaces in a ship except floor. (2) Fire retardant veneers applied on non-combustible bulkheads, linings, and ceilings within accommodation spaces and service areas are to be not more than 2.5 mm in thickness. In corridors, stairway enclosures, and control stations, fire retardant veneers are to be not more than 1.5 mm in thickness. (3) Notwithstanding the requirements (2) above, if the calorific value of fire retardant veneers measured by bomb method (refer to **Appendix 1**) does not exceed 45 MJ/m^2, the limit of thickness specified in (2) may not be observed. (4) The kinds and test procedures are similar to those specified in **2604. 3** and **4.** (5) In applying the requirements in (4) above for PVC films, test for surface flammability is to be conducted without insulation materials, and smoke and toxicity test is to be conducted including insulation materials.
Fire retardant floor coverings	(1) **Floor coverings** are other layers in the floor construction above the deck plating except primary deck coverings. (2) The kinds of test for fire retardant floor coverings are to be test for surface flammability, smoke and toxicity test. The procedures of which are to be in accordance with the requirements specified in **2604. 3** and **4.**
Primary deck coverings	(1) **Primary deck coverings** are the first layer of a floor construction which is applied directly on top of the deck plating and is inclusive of any primary coat, anti-corrosive compound or adhesive which is necessary to provide protection or adhesion to the deck plating. (2) The kinds of test for the primary deck coverings are to be of the test for the primary deck coverings and the testing procedure is to be in accordance with the requirements specified in **2604. 3** and **4.**
Fire retardant coatings	(1) **Fire retardant coatings** are the finishing materials applied on the internal exposed surface of a ship. (2) The approval of fire retardant coatings is to be made to actual coating systems (combination of under coat and top coat) on the basis of the coatings classified according to the kinds of synthetic resins used. (3) The classes of fire retardant coatings are as follows : (A) Alkyd resin coating (B) Chlorinated rubber coating (C) Tar epoxy resin coating (D) Denatured epoxy resin coating (E) Pure epoxy resin coating (F) Urethane resin coating (G) Emulsion coating (H) Water gross coating (I) Poly-vinyl chloride resin coating (J) Pure silicone coating (K) Others (4) The kinds and test procedures are to be in accordance with **2604. 3** and **4** correspondingly.

Table 3.26.1 Kinds and application of fire protection materials (continued)

Kinds	Application
Vertically supported textiles and films (including vertically hanging curtains and draperies)	(1) The test method for vertically supported textiles and films (including vertically hanging curtains and draperies) having the resistance to propagation of flame (hereinafter called curtains, etc.) is to be in accordance with the requirements in **2604. 6.** (2) **After flame time** means the time during which the material continues to burn after the ignition source has been removed or extinguished. (3) **Sustained ignition** means after flame time of 5 seconds or more. (4) **After glow** means persistence of a material after cessation of flaming or after the ignition source has been removed. (5) **Surface flash** means the rapid flash of a flame across the surface pile finish and often leaving the base fabric in an essentially undamaged condition.
Upholstered furniture	(1) The test method for upholstered furniture having the resistance to propagation of flame is to be in accordance with the requirements in **2604. 7.** (2) **Progressive smouldering** is an exothermic oxidation not accompanied by flaming which is self-propagating, i.e. independent of the ignition source. It may or may not be accompanied by incandescence.
Bedding components	(1) The test method for bedding components such as blankets, quilts, bedspreads, pillows and mattresses, including thin, light mattresses used on top of other mattresses having the resistance to propagation of flame is to be in accordance with the requirements in **2604. 8.** (2) **Mattress** is product in the form of a resilient material (for instance, polyurethane foam or light fibre fill) or of padding materials in combination with steel springs (spring mattress), enveloped by a cover. (3) **Quilt and pillow** are products of padding materials (down/feather or textile fibre) enveloped by a textile fabric. (4) **Ticking** is fabric enveloping the resilient material in a mattress. (5) **Ignitability** is a measure of the ease with which a material or a product can be ignited so as to flame or progressively smoulder. (6) **Ignition source** is source of energy which is used to ignite combustible materials or products. (7) **Flaming** is undergoing combustion in the gaseous phase, usually with emission of light. (8) **Smouldering** is an exothermic reaction taking place in a material without flaming, with or without emission of light. (9) **Progressive smouldering** is smouldering which continues after the ignition source is extinguished or removed.
Fire door control system	The test method for control system of fire door which is required to be able to operate in case of fire is to be in accordance with the requirements in **2604. 9.**

2602. Data to be submitted

The following reference data are to be submitted to the Society in addition to those specified in **102.**

(1) Kinds of materials (names and trade names of the materials specified in **2601. 1.**

(2) Outline of testing facilities (This may be omitted if the tests are carried out by an organization which the Society considers appropriate for the purpose)

(3) Details of test specimen (including joint construction, points of temperature measurement, fixing method of periphery, etc.)

2603. Type tests

1. The type tests are to be carried out by the procedures specified in **2604.** or by those regarded to be equivalent by the Society in the presence of the Surveyor. The witness by the Surveyor may be omitted, however, if the type tests are conducted by any official organizations which the Society considers appropriate.

2. The test specified in the preceding 1 may be omitted if the material is subjected to the tests specified in the preceding 1 in an organization which the Society considers appropriate and having a certificate or test records. The Society may require additional tests, however, if it considers necessary.

3. For other established test procedures and acceptance criteria other than those specified in **2604.** the approval expiry period is as follows.

(1) The Society may issue type approval certificates of products tested in accordance with procedures adopted in **IMO Res. 61(67),** provided the tests were conducted no later than one year after entry into force of **IMO Res. MSC 307(88).**

(2) The Society may issue type approval of a product tested in accordance with procedures adopted in **IMO Res. 61(67)** without retesting, provided that the test report is not more than 15 years old and that no alteration of components or construction has been made to the product.

2604. Test methods

1. Test method for non-combustible material

Test method for non-combustible material is to be in accordance with the requirements given in **Table 3.26.2.** (refer to **FTP Code, Annex 1, Part 1** and **IMO Res. MSC 307(88) & ISO 1182**)

Table 3.26.2 Test method for non-combustible material

Item	Requirements
Test specimens	(A) The test specimen shall be taken from a sample which is sufficiently large to be representative of the product. (B) The specimens are to be cylindrical and each is to have a diameter of 45^{+0}_{-2} mm, a height of 50 ± 3 mm and a volume of 80 ± 5 cm^3. (C) For homogeneous products, five specimens shall be made. For nonhomogeneous products, 10 specimens shall be made.
Preparation of specimens	(A) If the thickness of the material is different from 50 ± 3 mm, specimens of the height of 50 ± 3 mm shall be made by using a sufficient number of layers of the material and/or by adjustment of the material thickness. (B) For non-homogeneous materials, the specimen of height of 50 ± 3 mm shall be constructed such that all layers are represented in the specimen in proportion to their presence, by volume, in the original specimen.

Table 3.26.2 Test method for non-combustible material (continued)

Item	Requirements
Preparation of specimens	(C) The layers shall occupy a horizontal position in the specimen holder and shall be held together firmly, without significant compression, by means of two fine steel wires, of maximum diameter 0.5mm, to prevent air gaps between layers. The specimens of loose fill materials shall be representative in appearance, density, etc., as in use. (D) When a specimen is composed of a number of layers, the overall density should be as close as possible to that of the product provided by the manufacturer.
Conditioning	The specimens are to be conditioned in a ventilated oven maintained at 60 ± 5 °C, for between 20 hours and 24 hours, and cooled to ambient temperature in a desiccator prior to the testing. The mass of each specimen is to be determined to an accuracy of 0.01 g prior to test.
Observations during test	(A) Record the mass before and after test for each specimen tested and note any observations relating to the behaviour of the specimen during the test including during insertion into the apparatus. (B) Note the occurrence of any sustained flaming and record the duration of each flaming. Sustained flaming is to be taken as the continuous presence of flame caused by the specimen lasting 5 seconds or longer. (C) Some specimens exhibit only a steady blue-coloured luminous gas zone; this shall not be considered as flaming but be noted under "observations during tes" in the test report. (D) Record the following temperatures, as measured by the thermocouples; (a) the initial furnace temperature, T_i(furnace) : the average temperature over the final 10 min of the stabilization period) (b) the maximum furnace temperature T_m(furnace) and the maximum specimen surface temperature T_m(surface) : the discrete values at maximum temperature anywhere over the entire test period; and (c) the final furnace temperature T_f(furnace) and the final specimen surface temperature T_f(surface) : the average temperature over the final 1 min of the test period 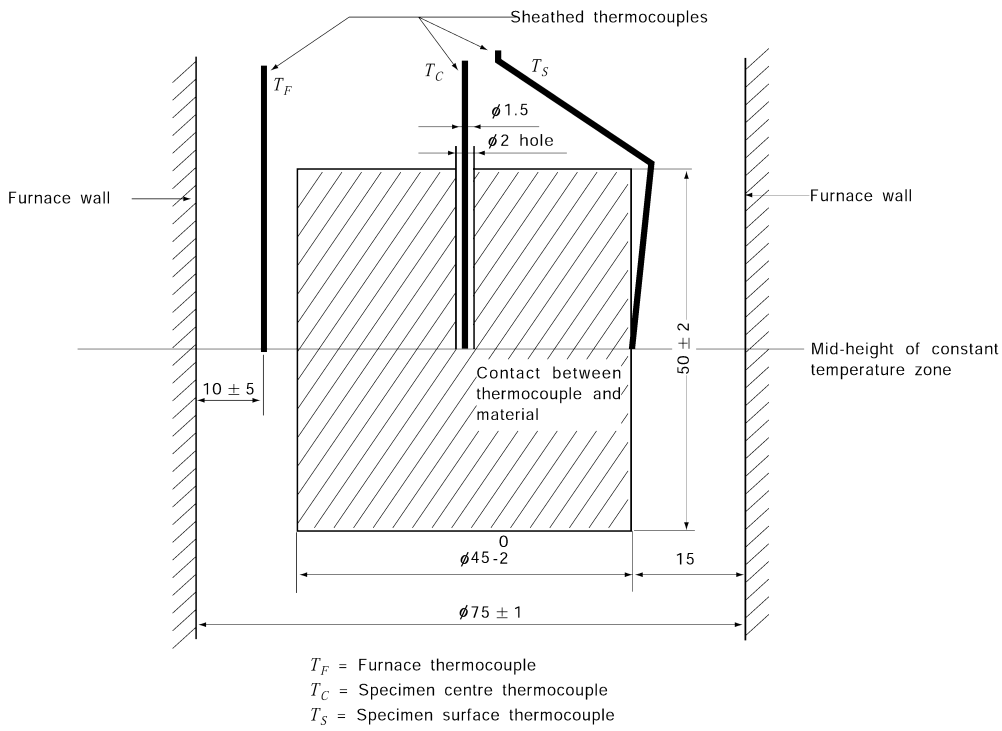

Table 3.26.2 Test method for non-combustible material (continued)

Item	Requirements
Expression of results	(A) Calculation of averages (a) For homogeneous products, calculate the averages for Mass loss(B) to Average temperature rise(E) for the five specimen. (b) For non-homogeneous products, calculate the averages for Mass loss(B) to Average temperature rise(E) for each set of five specimens in the same orientation. The results for each orientation shall be presented separately, but they shall not be combined. Classification shall be based on the most onerous orientation such that all the averages for each set of five specimens shall meet the requirements in "Classification of materials". (B) Mass loss (a) Calculate and record the mass loss in percentage for each of the five specimens, expressed as a percentage of the initial mass of the specimen, measured as specified in "Observations during test(A)". (b) Calculate the average mass loss in percentage, which is the average of mass loss of the five specimens. (C) Flaming (a) Calculate and record the total duration of sustained flaming, in seconds, for each of the five specimens measured as "Observations during test(B)". (b) Calculate the average duration of sustained flaming, which is the average of total duration of sustained flaming of the five specimens, (D) Temperature rise Calculate and record the following temperature rise in ℃ for each of the five specimens recorded by the thermocouples as specified in "Observations during test(C)". (a) furnace temperature rise : $T_r(furnace) = T_m(furnace) - T_f(furnace)$ (b) specimen surface temperature rise : $T_r(surface) = T_m(surface) - T_f(surface)$ (E) Average temperature rise Calculate the average furnace temperature rise Tave r(furnace) and the average specimen surface temperature rise Tave r(surface) from the values obtained by (D) Temperature rise.
Classification of materials	A material is to be deemed non-combustible if all the following criteria are satisfied. (A) The average furnace thermocouples temperature rise as calculated is not to exceed 30°C; (B) The average surface thermocouples temperature rise as calculated is not to exceed 30°C; (C) The mean duration of sustained flaming as calculated is not to exceed 10 second; and (D) The average mass loss as calculated is not to exceed 50 %.
Others	Details of test for non-combustible materials not specially mentioned in **2604. 1** are to comply with **FTP Code, Annex 1, Part 1.**

2. Fire test of "A" and "B" class divisions (refer to FTP Code, Annex 1, Part 3 and **IMO Res. MSC 307(88)**)

(1) General

(A) The dimensions of the structural cores of the test specimens given in (2) below are intended for structural cores of stiffened flat plates of steel or aluminium alloy. The Society may require tests to be carried out on specimens having structural cores of materials other than steel or aluminium alloy if such materials are more representative of the construction to be used on board ships.

(B) "A" class divisions which consist of uninsulated steel bulkheads or decks of suitable scantlings and without openings can be deemed to satisfy the requirements for "A-0" class divisions, i.e. to satisfy the requirements for the passage of smoke and flame, without the need for testing. All other divisions, including "A-0" class divisions with a structural core of aluminium, are required to be tested.

(C) Results obtained on an insulating material used in conjunction with an 'A' class division may be applied to constructions incorporating heavier scantling than those tested and providing the orientation of the construction is the same, i.e. results from bulkhead tests are not to be applied to decks and vice versa.

(D) Constructions are to be tested without paint or other superimposed finish, provided that where they are only produced with a superimposed finish, and subject to the agreement of

the Society, they may be tested as produced. Such constructions may be required to be tested with a superimposed finish if such a finish is considered by the Society to have a detrimental effect on the performance of the construction in the test.

(E) The construction to be tested are to be, as far as possible, representative of that to be used on board ships, including the materials and method of assembly.

(F) Non-combustible materials used in the construction of the specimen are not to be more than 24 months old from the date of the performance of the fire resistance test. If not, tests are to be conducted specified in **2604. 1** above.

(G) Adhesives used in A or B Class divisions should be low flame spread

(H) The thickness of insulation on the stiffeners need not be same as that of the steel plate.

(I) Doors, windows and other division penetrations intended to be installed in fire divisions made of material other than steel shall correspond to prototypes tested on a division made of such material.

(J) "B" class constructions shall be tested without finished. For constructions where this is not possible, the finishes may be included in the "B" class test specimen, and shall be included in the non-combustibility test of the construction.

(2) Nature of test specimens is to be as specified in **Table 3.26.3.**

Table 3.26.3 Fire test specimens of "A" and "B" class divisions

Kinds	Item	Requirements
"A" class bulkheads	Dimensions	(1) The minimum overall dimensions of test specimen, including the perimeter details at the top, bottom and vertical edges, are 2,440 mm width and 2,500 mm height. (a) When the maximum overall height in practice is less than that given above, then the test specimen shall be of the maximum height to be used in practice. (b) The minimum bulkhead panel height shall be a standard height of the manufactured panel with a dimension of 2,400 mm. (2) The overall dimensions of the structural core are to be 20 mm less in both the width and the height than the overall dimensions of the specimen, and the other dimensions of the structural core are to be as follows: - thickness of plating : steel 4.5 ± 0.5 mm aluminium 6.0 ± 0.5 mm - stiffeners spaced at 600 mm : steel 65 ± 5 mm × 65 ± 5 mm × 6 ± 1 mm aluminium 100 ± 5 mm × 75 ± 5 mm × 9 ± 1 mm (3) The width of the structural core may be greater than the specified dimensions providing that the additional width is in increments of 600 mm to maintain the stiffener centres and the relationship between the stiffeners and the perimeter detail. (4) Any joints in the plating are to be full welded, at least from one side. The dimensions of the structural core and the details around the perimeter of the specimen are to be as illustrated in **Fig 3.26.2** and **Fig 3.26.3.** 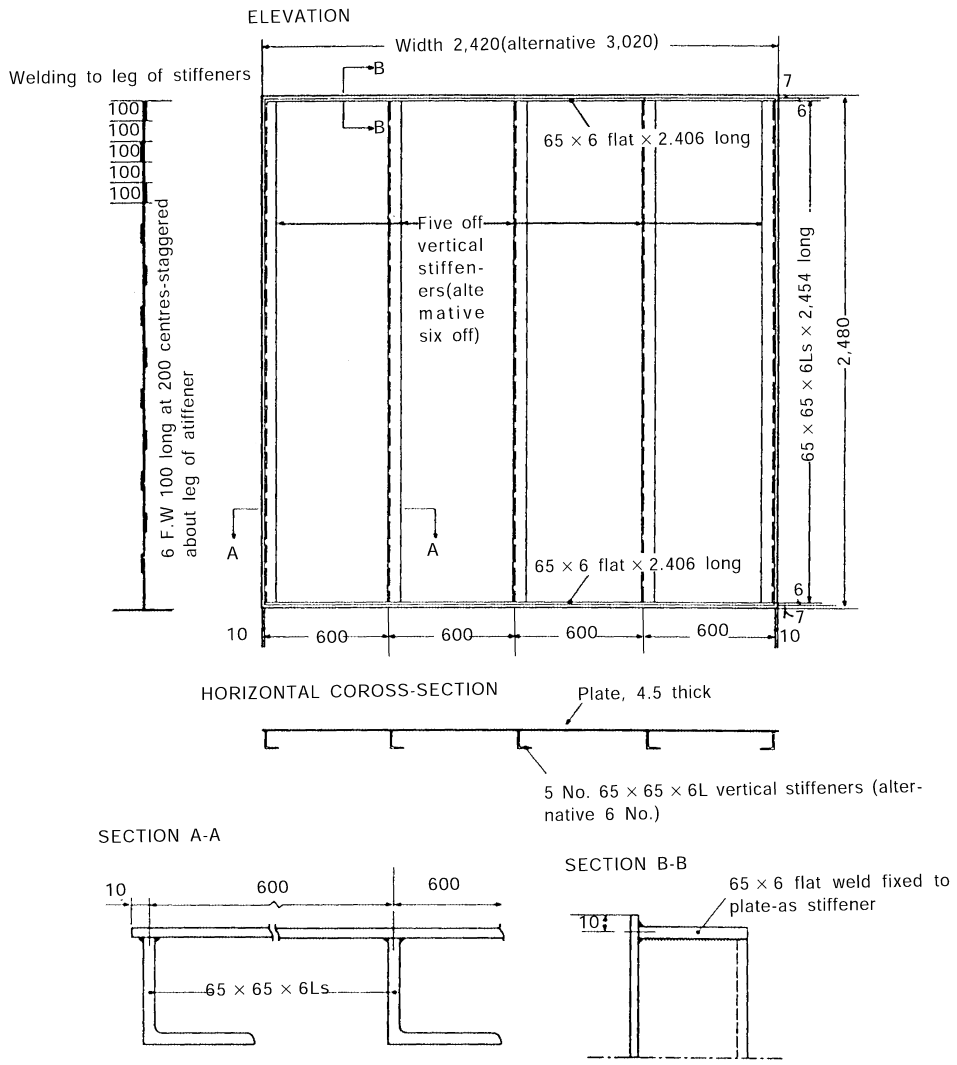 **Fig 3.26.2 Structural Steel Core for "A" Class Bulkhead and "B"**

Table 3.26.3 Fire test specimens of "A" and "B" class divisions (continued)

Kinds	Item	Requirements
"A" class bulkheads	Dimensions	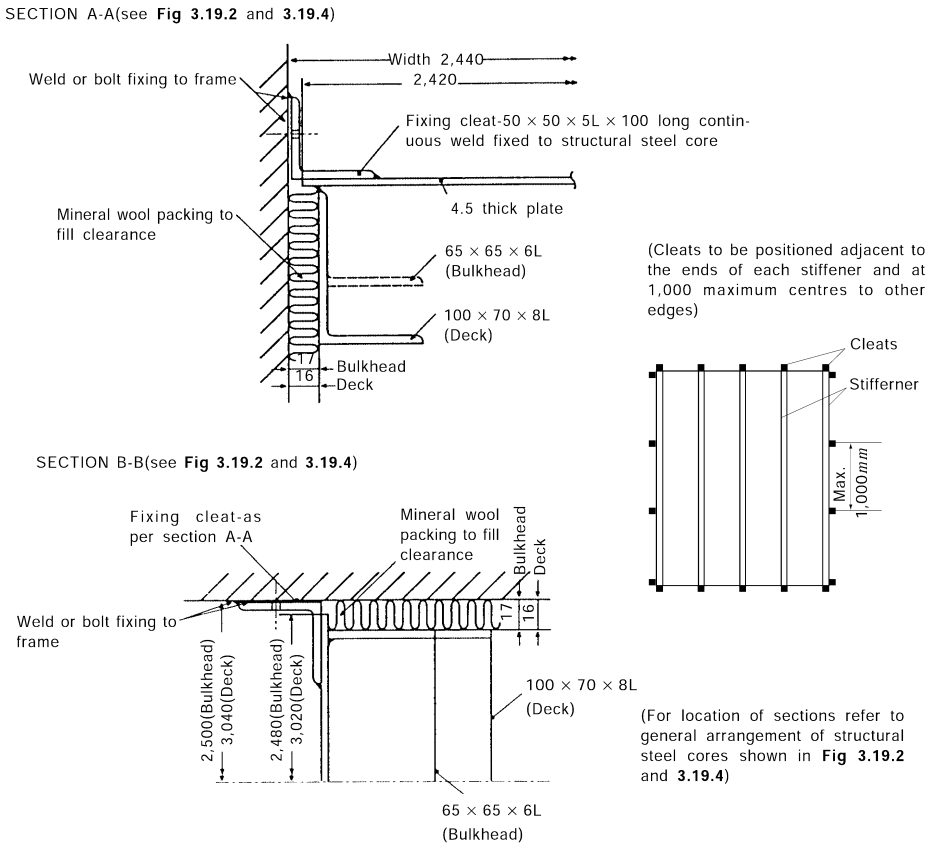 **Fig 3.26.3 Connection between Restraint Frame and Structural Steel Core**
	Construction	(1) Where insulation is provided by panels (e.g. a "B" class lining), then the test specimen is to be designed such that at least one of the panels is of full width and this, or these, are to be positioned such that both its/their longitudinal edges are jointed to an adjacent panel and are not secured to the restraint frame. (2) The overall dimensions of the panel insulation system, including the perimeter details at all the edges, are to be 20 mm greater in each direction than the equivalent dimensions of the structural core.
"A" class decks	Dimensions	(1) The minimum overall dimensions of test specimen, including the perimeter details at all the edges, are 2,440 mm width and 3,040 mm length. (2) The overall dimensions of the structural core are to be 20 mm less in both the width and the length than the overall dimensions of the specimen, and the other dimensions of the structural core are to be as follows: - thickness of plating : steel 4.5 ± 0.5 mm aluminium 6.0 ± 0.5 mm - stiffeners spaced at 600 mm : steel 100 ± 5 mm × 70 ± 5 mm × 8 ± 1 mm aluminium 150 ± 5 mm × 100 ± 5 mm × 9 ± 1 mm (3) The width of the structural core may be greater than the specified dimensions providing that the additional width is in increments of 600 mm to maintain the stiffener centres and the relationship between the stiffeners and the perimeter detail. (4) Any joints in the plating are to be full welded, at least from one side. The dimensions of the structural core and the details around the perimeter of the specimen are to be as illustrated in **Fig 3.26.3** and **Fig 3.26.4.**

Table 3.26.3 Fire test specimens of "A" and "B" class divisions (continued)

Kinds	Item	Requirements
"A" class decks	Dimensions	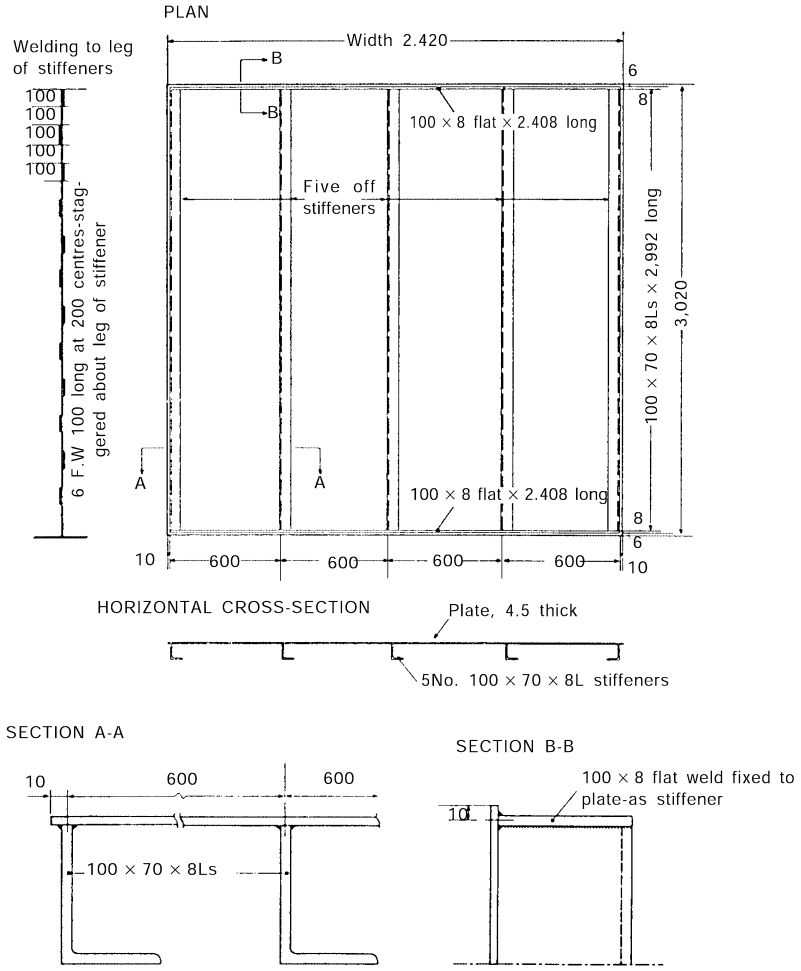 **Fig 3.26.4 Structural Steel Core for "A" Class Deck and "B" Class Ceiling**
	Construction	(1) Where insulation is provided by panels (e.g. a "B" class ceiling), then the test specimen is to be designed such that at least one of the panels is of full width and this, or these, are to be positioned such that both its/their longitudinal edges are jointed to an adjacent panel and are not secured to the restraint frame. (2) The overall dimensions of the panel insulation system, including the perimeter details at all the edges, are to be 20 mm greater in each direction than the equivalent dimensions of the structural core.
"A" class doors	Dimensions	The test specimen is to incorporate the maximum size (in terms of both the width and the height) of door leaf of leaves for which approval is to be sought. The maximum size of a door which can be tested will be determined by the requirement to retain certain dimensions of the structural core.
	Design	(1) Door furniture such as hinges, locks, latches, shoot bolts, handles, etc. are to be constructed of materials having melting points of not less than 950°C unless it can be shown by the fire test that materials having melting points below 950°C do not adversely affect the performance of the door. (2) The door leaf and frame are to be mounted as appropriate into a 'A' class bulkhead of compatible construction, thereby reflecting an actual end use situation. The bulkhead is to have dimension as specified in the dimension of 'A' class bulkhead above. The bulkhead is to be of a construction approved by the Society as having at least a similar classification to that required by the door.

Table 3.26.3 Fire test specimens of "A" and "B" class divisions (continued)

Kinds	Item	Requirements
"A" class doors	Design	No additional stiffening shall be provided to the structurual core unless provided as part of the door frame. The method of fixing the door frame to the bulkhead is to be as used in practice. The door is to be positioned such that there is a minimum width of the bulkhead of 300 mm to each vertical side of the door and a minimum distance of 100 mm from the top edge of the bulkhead. If the method of fixing the door frame in a test is made by bolts, the Society may also accept welding as a method of fixing the door frame without further tests. (3) The door is to be positioned such that there is a minimum width of the bulkhead of 300 mm to each vertical side of the door and a minimum distance of 100 mm from the top edge of the bulkhead. If the method of fixing the door frame in a test is made by bolts, the Society may also accept welding as a method of fixing the door frame without further tests. (4) For doors mounted in a three-sided frame, the door shall be mounted with a bottom gap of between 12 mm and 25 mm between the bottom of the door and the test frame. (5) The door is to be mounted into the bulkhead such that the side expected to give the inferior performance will be exposed to the heating condition of the test. A hinged door is to be tested with the door leaf opening away from the heating conditions unless the Society deems otherwise. For sliding doors, it is not possible to state generally from which side the door is to be tested to give the inferior performance. It will, therefore, be necessary to conduct two separate tests, one with the door mounted to the exposed face and one with the door mounted to the unexposed face of the bulkhead (6) For a door which incorporates a ventilation opening within its construction, the ventilation grille(s) is (are) to be open at the commencement of the test. Temperature measurements on such a door are not to be made over the face of the grille(s). (7) Lift landing doors can be expected to be exposed to fire from the corridor side only, and they shall be exposed to fire test heating conditions from that side only. (8) Tests performed with double leaf doors will not be accepted as approval documentation for single leaf doors. (9) Double leaf doors should be tested with equally sized door leaves unless the door is intended to have unequally sized leaves.
"B" class bulkheads	Dimensions	(1) The minimum overall dimensions of test specimen, including the perimeter details at the top, bottom and vertical edges, are 2,440 mm width and 2,500 mm height. When the maximum overall height in practice is to be less than given above, then the test specimen is to be of the maximum height to be used in practice. (2) The minimum bulkhead panel height shall be a standard height of the manufactured panel with a dimension of 2,400 mm.
	Construction	Where the construction incorporates panels, the specimen is to be constructed such that at least one of the panels is of full width and this, or these, is to be positioned such that both its/their longitudinal edges are jointed to an adjacent panel and are not secured to the restraint frame.
"B" class decks	Dimensions	The minimum overall dimensions of test specimen, including the perimeter details at all the edges, are 2,440 mm width and 3,040 mm length. When the maximum dimension in practice is to be less than given above, then the test specimen is to be of the maximum size to be used in practice.
	Construction	Where the construction incorporates panels, the specimen is to be constructed such that at least one of the panels is of full width and this, or these, is to be positioned such that both its/their longitudinal edges are jointed to an adjacent panel and are not secured to the restraint frame.
"B" class door	Dimensions	The test specimen is to incorporate the maximum size (in terms of both the width and the height) of door leaf of leaves for which approval is to be sought. The maximum size of a door which can be tested will be determined by the requirement to retain certain dimensions of the bulkhead.
	Design	(1) Door furniture such as hinges, locks, latches, shoot bolts, handles, etc. are to be constructed of materials having melting points of not less than 850°C unless it can be shown by the fire test that materials having melting points below 850°C do not adversely affect the performance of the door. (2) The door leaf and frame are to be mounted as appropriate into a 'B' class bulkhead of compatible construction, thereby reflecting an actual end use situation. The bulkhead is to have dimension as specified in the dimension of 'B' class bulkhead above. The bulkhead is to be of a construction approved by the Society as having at least a similar classification to that required by the door. The method of fixing the door frame to the bulkhead is to be as used in practice.

Table 3.26.3 Fire test specimens of "A" and "B" class divisions (continued)

Kinds	Item	Requirements
"B" class door	Design	(3) The bulkhead shall be of a construction approved by the Society as having at least a similar classification to that required by the door, and approval shall be limited to the type of construction in which the door was tested. (4) The method of fixing the door frame to the bulkhead shall be as used in practice. If the method of fixing the door frame in a test is made by bolts, the Society may also accept welding as a method of fixing the door frame without further tests. (5) For doors mounted in a three-sided frame, the door shall be mounted with a bottom gap of between 12 mm and 25 mm between the bottom of the door and the test frame. (6) The door is to be positioned such that there is a minimum width of the bulkhead of 300 mm to each vertical side of the door and a minimum distance of 100 mm from the top edge of the bulkhead. (7) The door is to be mounted into the bulkhead such that the side expected to give the inferior performance will be exposed to the heating condition of the test. A hinged door is to be tested with the door leaf opening away from the heating conditions unless the Society deems otherwise. For sliding doors, it is not possible to state generally from which side the door is to be tested to give the inferior performance. It will, therefore, be necessary to conduct two separate tests, one with the door mounted to the exposed face and one with the door mounted to the unexposed face of the bulkhead (8) For a door which incorporates a ventilation opening within its construction, the ventilation grille(s) is (are) to be open at the commencement of the test. Temperature measurements on such a door are not to be made over the face of the grille(s).
"B" class linings	Dimensions	(1) The minimum overall dimensions of test specimen, including the perimeter details at the top, bottom and vertical edges, are 2,440 mm width and 2,500 mm height. When the maximum overall height in practice is to be less than that given above, then the test specimen shall be of the maximum height to be used in practice. (2) The minimum bulkhead panel height shall be a standard height of the manufactured panel with a dimension of 2,400 mm.
	Design	(1) The lining is to be positioned alongside a structural core constructed in accordance with the dimension of 'A' class bulkhead above. The design of the lining is to be such that it facilitates its assembly with the limited access provided by the proximity of the structural core, i.e. it is to be mounted with the structural core in place. (2) During a test on an "A" class bulkhead which utilizes membrane protection along its exposed side, e.g. a 'B' class lining, it is possible also to evaluate the performance of the lining with a view to classification providing that the necessary thermocouples are attached to the lining and proving that the necessary integrity measurements are made. (3) The specimen is to be constructed such that at least one of the panels is of full width and this, or these, is to be positioned such that both its/their longitudinal edges are jointed to an adjacent panel and are not secured to the restraint frame.
"B" class ceilings	Dimensions	(1) The minimum overall dimensions of test specimen, including the perimeter details at the top, bottom and vertical edges, are 2,440 mm width and 3,040 mm length. (2) When the maximum dimensions in practice are less than those given above then the test specimen shall be of the maximum size to be used in practice, and the tested width shall be reported.
	Design	(1) The ceiling is to be positioned below a structural core constructed in accordance with the dimension of 'A' class deck above. (2) The design of the ceiling is to be such that it facilitates its assembly with the limited access provided by the proximity of the structural core, i.e. it is to be mounted with the structural core in place. (3) During a test on an "A" class deck which utilizes membrane protection along its underside, e.g. a 'B' class ceiling, it is possible also to evaluate the performance of the ceiling with a view to classification providing that the necessary thermocouples are attached to the ceiling and proving that the necessary integrity measurements are made. (4) If the ceiling incorporates panels, the specimen is to include example of both the lateral and longitudinal joints between the panels. (5) If the specimen is to simulate a ceiling where the maximum length of the panels is greater than the length of the specimen, then a joint is to be positioned at a distance of approximately 600 mm from one of the shorter ends of the test specimen. (6) The specimen is to be constructed such that at least one of the panels is of full width and this, or these, is to be positioned such that both its/their longitudinal edges are jointed to an adjacent panel and are not secured to the restraint frame.

Table 3.26.3 Fire test specimens of "A" and "B" class divisions (continued)

<table>
<tr><th>Kinds</th><th>Item</th><th>Requirements</th></tr>
<tr><td rowspan="3">Windows</td><td>General</td><td>Window is taken to include windows, sidescuttles and any other glazed opening provided for light transmission or vision purposes in "A" class bulkheads. Windows in "A" class doors are considered to be part of the door and they are to be tested within the appropriate door.</td></tr>
<tr><td>Dimensions</td><td>(1) The test is to be conducted on the window of the maximum size (in terms of both the width and the height) for which approval is sought.
(2) The test shall be conducted on a window of the maximum size(in terms of both the height and the width) and the type of the glass pane and/or the minimum thickness of the glass pane or panes/and gaps, if appropriate, for which approval is sought. Test results obtained on this configuration shall, by analogy, allow approval of windows of the same type, with lesser dimensions in terms of height and width and with the same or greater thickness.</td></tr>
<tr><td>Design</td><td>The bulkhead which includes the window is to be insulated to class 'A-60' on the stiffened face, which is to be the face exposed to the heating conditions of the test. There may be special applications of windows where the Society considers it appropriate to test the window with the insulation of the bulkhead to the unexposed face of the structural core, or within bulkheads other than class 'A-60'. The window is to be positioned within the bulkhead, shown in **Fig 3.26.2**, at that height which is intended for practical application. When this is not known, the window is to be positioned with the top of its frame as close as possible, but not closer than 300 mm, to the top of the bulkhead.</td></tr>
<tr><td rowspan="2">Fire dampers</td><td>Dimensions</td><td>The maximum sizes (in terms of both the width and the height, or the diameter) of each type of fire damper for which approval is sought are to be tested in both vertical and horizontal orientation.</td></tr>
<tr><td>Design</td><td>(1) A bulkhead which includes the damper is to be constructed in accordance with the dimension of 'A' class bulkhead above and is to be insulated to class "A-60" on the stiffened face, which is to be the face which is not exposed to the heating conditions of the test. A deck which includes the damper is to be constructed in accordance with (B) (a) above and is to be insulated to class "A-60" on the stiffened face, which is to be the face which is exposed to the heating conditions of the test.
(2) Fire dampers are to be incorporated into or fixed to coaming or spigots, which are to be welded or bolted into the structural core.
The length on the unexposed side = (450 mm or a needed insulation length for a damper under test)(L_{unexp})+ 50 mm.
The thickness of the coaming or spigot shall be as follows :
<table>
<tr><th>Width* or diameter of the duct</th><th>Minimum thickness of coaming or spigot</th></tr>
<tr><td>Up to and including 300 mm</td><td>3 mm</td></tr>
<tr><td>760 mm and over</td><td>5 mm</td></tr>
</table>
* Width means the greater of the two cross-sectional dimensions.

For widths or diameters of ducts in excess of 300 mm but less than 760 mm, the thickness of the coaming or spigot is to be obtained by interpolation. The coaming or spigot are to be insulated as shown in **Fig 3.26.5.**
(3) The coamings or spigots (including insulation) are to be positioned only in the top half of a bulkhead but are to be no closer than 200 mm from the edges of a bulkhead or a deck. Where more than one damper is to be tested simultaneously in a division, the separation between adjacent coamings or spigots (including insulation) are not to be less than 200 mm. When more than one damper is included in a bulkhead, the top edges of all dampers are to be, as far as possible, at the same height.
(4) The fire dampers are to be positioned on the exposed face of the bulkhead or deck, at a distance of at least 225 mm from the structural core, with their operative controls also on that side of the division. When a damper is mounted in the bulkhead the fuse element should be situated at the lowest level of the damper as in practice
(5) Fire dampers which are operated automatically shall be in the open position at the start of the test and shall be closed by an automatic device. The damper shall be in the closed position within 2 min after the commencement of the test. If the fire damper fails to close after 2 min from the start of the test, the fire damper shall be deemed to have failed and the test shall be discontinued.</td></tr>
</table>

Table 3.26.3 Fire test specimens of "A" and "B" class divisions (continued)

Kinds	Item	Requirements
Fire dampers	Design	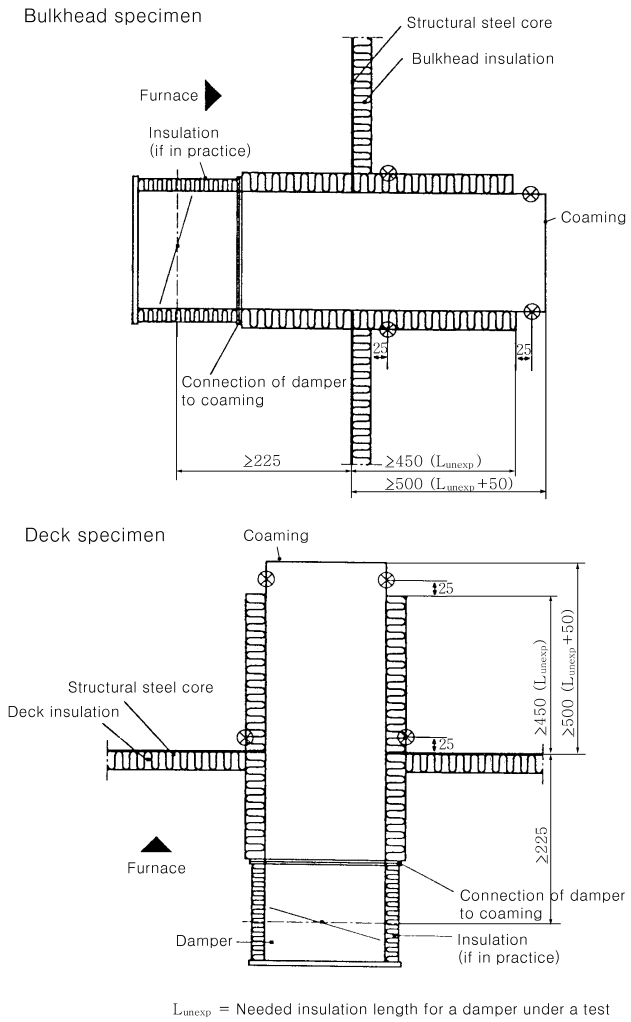 **Fig 3.26.5 Fire Dampers: Insulation on Test Specimens and Position of Unexposed-face Thermocouples** (6) Fire dampers which are operated with a manual systems shall be closed at the test time of 1 min.
Pipe and duct penetrations	Dimensions	The maximum and minimum sizes (in terms of both the width and the height, or diameter) of each type of pipe penetration for which approval is sought are to be tested in both vertical and horizontal orientation.
	Design	(1) A bulkhead which includes the pipe penetration is to be constructed in accordance with (A) (a) above and is to be insulated to class "A-60" on the stiffened face, which is to be the face which is not exposed to the heating conditions of the test. A deck which includes the pipe penetration is to be constructed in accordance with the dimension of 'A' class deck above and is to be insulated to class "A-60" on the stiffened face, which is to be the face which is exposed to the heating conditions of the test. (a) "A-0" class pipe penetrations are recommended to be performed in an uninsulated ("A-0") bulkhead/deck. If the pipe penetrations are tested as an "A-60" class penetrations, any insulation fitted (on the penetration itself and 200 mm around) will be required to be fitted also for class "A-0". (b) "A-0" penetrations shall not be approved without an "A-0" test although tested and approved as "A-60".

Table 3.26.3 Fire test specimens of "A" and "B" class divisions (continued)

Kinds	Item	Requirements
Pipe and duct penetrations	Design	(2) The pipe penetrations are to be positioned only in the top half of a bulkhead but are not to be closer than 200 mm from the edges of a bulkhead or a deck. Where more than one pipe penetration is to be tested simultaneously in a division, the separation between adjacent penetrations is not to be less than 200 mm. Both measurements are to relate to the distance to the nearest part of the penetration system, including any insulation which is part of the system. (3) Each pipe passing through a penetration is to project 500 ± 50 mm beyond the exposed end of the penetration and 500 ± 50 mm beyond the unexposed end of the penetration. The exposed end of the pipe is to be blanked off, using an appropriate methodology to ensure that any fire penetration into the pipe does not occur via the end of the pipe in advance of it occurring through the exposed perimeter of the pipe. (4) Each pipe is to be firmly supported and fixed independent of the bulkhead or deck on the unexposed side of the test specimen, e.g. by a framework mounted from the restraint frame. The support and fixing of the pipe are to restrain it from movement during the test. (5) When the deck penetration is fitted on an exposed side or is fitted symmetrically, general application will be given. When the deck penetration is fitted on an unexposed side, the approval will limit the penetration to the tested orientation. When the bulkhead penetration is fitted symmetrically, approval would be given for general application. For bulkhead penetrations with an exposed or unexposed fitted frame, one test for each fitting is required in order for obtaining approval for general application. (6) Sealing of pipe and duct penetrations: there shall be no visible openings before the start of the fire test.
Cable transits	Dimensions	The maximum and minimum sizes (in terms of both the width and the height, or diameter) of each type of pipe penetration for which approval is sought are to be tested in both vertical and horizontal orientation.
	Design	(1) A bulkhead which includes the cable transit is to be constructed in accordance with the dimension of 'A' class bulkhead above and is to be insulated to class "A-60" on the stiffened face, which is to be the face which is not exposed to the heating conditions of the test. A deck which includes the cable transit is to be constructed in accordance with the dimension of 'A' class deck above and is to be insulated to class 'A-60' on the stiffened face, which is to be the face which is exposed to the heating conditions of the test. (a) "A-0" class cable transits are recommended to be performed in an uninsulated ("A-0") bulkhead/deck. If the cable transits are tested as an "A-60" class penetrations, any insulation fitted (on the cable transits itself and 200 mm around) will be required to be fitted also for class "A-0". (b) "A-0" cable transits shall not be approved without an "A-0" test although tested and approved as "A-60". (2) The cable transits are to be positioned only in the top half of a bulkhead but are not to be closer than 200 mm from the edges of a bulkhead or a deck. Where more than one cable transit is to be tested simultaneously in a division, the separation between adjacent penetrations is not to be less than 200 mm. Both measurements are to relate to the distance to the nearest part of the penetration system, including any insulation which is part of the system. (3) Notwithstanding the above, the distance between transits is to be sufficient to ensure that the transits do not influence each other during the test, except that this requirement does not apply to muli-transits which are intended to be positioned adjacent to one another. (4) The cables are to project 500 ± 50 mm beyond the transit on the exposed side of the division and 500 ± 50 mm on the unexposed side. Each cable shall be firmly supported and fixed independent of the bulkhead or deck on the unexposed side of the test specimen, e.g., by a framework mounted from the restraint frame. The support and fixing of the cables shall restrain them from movement during the test. (5) Cable transits shall be fitted to the bulkhead or deck in accordance with the manufacturer's specifications. The cables and sealing compounds or blocks shall be incorporated into the transits with the bulkhead and deck panels places respectively in vertical and horizontal positions. Any insulation shall be applied to the cables and transits with the panels in the same respective positions. (6) The transit(s) is to be tested incorporating a range of different types of cables (e.g. in terms of number and type of conductor, type of sheathing, type of insulation material, size) and is to provide an assembly which represents a practical situation which may be found on ships. The test results obtained from a given configuration are generally valid for the tested types of cables of size equal to or smaller than tested.

Table 3.26.3 Fire test specimens of "A" and "B" class divisions (continued)

Kinds	Item	Requirements
Cable transits	Design	(7) Tests shall be conducted for the maximum and minimum fill based on the inside cross-sectional area at each transit. The distance between the adjacent cables shall be the minimum specified by the manufacturer, and the cables should be placed close to the centre of the transit. (8) When the deck cable transit is fitted on an exposed side or is fitted symmetrically, general application will be given. When the deck cable transit is fitted on the unexposed side, the approval will limit the penetration to the tested orientation. When the bulkhead cable transit is fitted symmetrically, approval would be given for general application. For bulkhead cable transit with exposed or unexposed fitted frame, one test for each fitting is required in order for obtaining approval for general application. (9) Sealing of cable transits shall have no visible opening before the start of the fire test.
Continuous "B" class divisions	Continuous 'B' class ceilings	The ceilings are to be tested in accordance with "B" class ceilings above except that the ceiling is to be mounted on the horizontal furnace so that at least 150 mm high "B" class bulkheads are mounted on the furnace and the ceiling is fixed to these partial bulkheads by using the joining method as is intended to be used in practice. Such ceilings and the joining methods are to be evaluated as required for ceilings in accordance with "B" class ceilings above and accordingly they are to be classified as "continuous "B" class ceilings".
	Continuous "B" class linings	A lining which has been evaluated in accordance with "B" class linings above to be a "B" ("B-0", "B-15", as applicable on basis of the lining test) class lining may be considered forming 'continuous "B" ("B-0" or "B-15", as applicable) class lining' in conjunction with a 'continuous "B" ("B-0' or "B-15", as applicable) class ceiling' and with the joining method used in the test without further testing the lining.
	Continuous "B" class construction	An enclosed construction installed on an "A" class deck and formed by 'continuous "B" ("B-0" or "B-15", as applicable) class lining' and 'continuous "B"("B-0" or "B-15",as applicable) class ceiling' is to be considered forming 'continuous 'B' class construction".

(3) Examination of the test specimens

(A) The Society is to verify the conformity of the test specimen with the drawings and method of assembly provided by the applicant and any area of discrepancy is to be resolved prior to commencement of the test.

(B) Door clearances

Following mounting of the door and immediately prior to test, the Society is to measure the actual clearances between the door leaf and the doorframe, and additionally for a double leaf door between the adjacent door leaves. The clearances are to be measured for each door leaf at two positions along the top and bottom edges and at three positions along each vertical edge.

(C) Door operation

Similarly, immediately prior to test, the Society is to check the operability of the door by opening the door leaf by a distance of at least 300 mm. The door leaf is to then be closed, either automatically, if such a closing device is provide, or manually. The door may be latched for the test but is not to be locked, and no devices for latching or locking are to be included which are not normally incorporated in practice.

(4) Observations during the test

Observations during the test is to be as specified in **Table 3.26.4.**

Table 3.26.4. Observation of "A" and "B" class divisions

Item	Observation
Flaming on unexposed face	The occurrence and duration of any flaming on the unexposed surface, together with the location of the flaming, are to be recorded. In case where it is difficult to identify whether or not there are flames then the cotton-wool pad is to be applied to the area of such disputed flaming to establish whether ignition of the pad can be initiated.

Table 3.26.4 Observation of "A" and "B" class divisions (continued)

Item	Observation
Cotton-wool pad	(a) Tests with the cotton-wool pad are used to indicate whether cracks and openings in the test specimen are such that they could lead to the passage of hot gases sufficient to cause ignition of combustible materials. (b) A cotton-wool pad is employed by placing the frame within which it is mounted against the surface of the test specimen, adjacent to the opening or flaming under examination, for a period of 30 seconds, or until ignition (defined as glowing or flaming) of the cotton-wool pad occurs (if this happens before the elapse of the 30 seconds period). A cotton-wool pad is to be used only once.
Gap gauges	(a) Tests with the gap gauges are used to indicate whether cracks and openings in the test specimen are of such dimensions that they could lead to the passage of hot gases sufficient to cause ignition of combustible materials. (b) The gap gauges are to be used at intervals which will be determined by the apparent rate of the specimen deterioration. Two gap gauges are to be employed, in turn, and without undue force to determine: - whether the 6 mm gap gauge can be passed through the specimen such that the gauge projects into the furnace, and can be moved a distance of 150 mm along the gap, or - whether the 25 mm gap gauge can be passed through the specimen such that the gauge projects into the surface. (c) If gaps in "A" or "B" class divisions are fully or partly sealed by intumescent materials, the gap gauge test shall be performed as if no intumescent material is present. (d) For doors mounted in a three-sided frame, the change of gap at the bottom of the door as measured by a horizontally-held gap gauge shall not increase by more than 12 mm along the bottom edge of the door. 12 mm gap gauge can be used for the purpose of examining the increase of such gap. The edges of the door above the horizontal plane along the bottom of the door should be checked in the same manner as the fou-sided framed door. * If the door is mounted with a 13 mm gap, the 25 mm gap gauge may be used to determine an unacceptable change in gap.
Deformation	The deflection of an "A" or "B" class test specimen, and additionally in the case of a door the maximum displacement of each corner of the door leaf relative to the door frame, are to be recorded during the test. These deflections are to be measured with an accuracy of 2 mm.
General behaviour	If quantities of smoke are emitted from the unexposed face, this is to be noted in the report.

(5) Duration of testing
Duration of testing is to be as specified in **Table 3.26.5.**

Table 3.26.5 Duration of testing of "H", "A" and "B" class divisions

Kind	Duration of testing
"H" class divisions	For all "H" class divisions, including those with doors, the test is to continue for minimum 120 minutes. When the specimen is of an "H" class division, with a structural steel core which is imperforate (e.g. without door), and where insulation is provided to the exposed face only (i.e. the structural steel core is the unexposed face of the construction), it is permitted to terminate the test prior to 120 minutes once the unexposed face temperature rise limits have been exceeded.
"A" class divisions	For all "A" class divisions, including those with doors, the test is to continue for minimum 60 minutes. When the specimen is of an "A" class division, with a structural steel core which is imperforate (e.g. without door), and where insulation is provided to the exposed face only (i.e. the structural steel core is the unexposed face of the construction), it is permitted to terminate the test prior to 60 minutes once the unexposed face temperature rise limits have been exceeded.
"B" class divisions	For all "B" class divisions, including those with doors, the test is to continue for minimum 30 minutes.
Termination of the test	The test may be terminated for one or more of the following reasons : (1) safety of personnel or impending damage to equipment ; (2) attainment of selected criteria ; or (3) request of the sponsor. The test may be continued after failure under subparagraph (2) above to obtain additional data.

(6) Performance criteria
Performance criteria is to be as specified in **Table 3.26.6**.

Table 3.26.6 Performance criteria of "H", "A" and "B" class divisions

Item	Kind	Performance criteria
Insulation	"H" class divisions, including "H" class doors	The average unexposed face temperature rise is not to be more than 140 °C, and the temperature rise recorded by any of the individual unexposed face thermocouples is not to be more than 180 °C during the periods given below for each classification: class "H-120" 120 minutes class "H-60" 60 minutes class "H-0" 0 minutes This division is to remain intact with the main structure of the vessel, and is to maintain its structural integrity after two(2) hours. Structural Integrity means that the structure will not fall under its own weight, nor will it crumble or break upon normal contact after exposure to the fire.
	"A" class divisions, including "A" class doors	The average unexposed face temperature rise is not to be more than 140 °C, and the temperature rise recorded by any of the individual unexposed face thermocouples is not to be more than 180 °C during the periods given below for each classification: class "A-60" 60 minutes class "A-30" 30 minutes class "A-15" 15 minutes class "A-0" 0 minutes
	"B" class divisions, including "B" class doors	The average unexposed face temperature rise is not to be more than 140 °C, and the temperature rise recorded by any of the individual unexposed face thermocouples is not to be more than 225 °C during the periods given below for each classification: class "B-15" 15 minutes class "B-0" 0 minutes

Table 3.26.6 Performance criteria of "H", "A" and "B" class divisions

Item	Kind	Performance criteria
Integrity	General	For all "A" and "B" class divisions, including "A" and "B" class doors, the following requirements are to be satisfied for the minimum test duration relevant to the classification. "A" and "B" class doors are not required to be able to be opened or closed, during or after the specified test duration.
	Flaming	there are to be no flaming on the unexposed face
	Cotton-wool pad	there are to be no ignition, i.e. flaming or glowing, of the cotton-wool pad when applied in accordance with **Table 3.26.4** above or when used to assist evaluation of flaming in accordance with **Table 3.26.4** above.
	Gap gauges	Gap gauges: it is not to be possible to enter the gap gauges into any opening in the specimen in the manner described in **Table 3.26.4** above.
Structural core temperature		In the case of load-bearing divisions of aluminium alloy, the average temperature of the structural core obtained by the thermocouples is not to rise more than 200 °C above its initial temperature at any time during the minimum test duration relevant to the classification described in (5) above. Where the structural core is of a material other than steel or aluminium alloy, the Society is to decide the rise in temperature which is not to be exceeded during the test duration.
Continuous "B" class ceilings and linings		Where ceilings or linings are required to be continuous "B" class ceilings or linings, they may be tested and evaluated in accordance with **appendix 4, Part 3, Annex 1** and **IMO FTP Code**.
Additional requirements		(1) The specimen of the "A" and "B" class constructions shall be constructed from non-combustible materials. (A) adhesives and vapour barriers used in the construction of the specimen are not required to be non-combustible; however, they shall have low flame-spread characteristics; (B) sealing materials used in penetration systems; (C) seals for gas-, water- and weather-tight doors; (D) seals for windows; and (E) filling material within glazing systems. (a) Adhesives and sealing materials used in testing of penetration sysstems shall be used in the actual structure. Materials mentioned in paragraphs (A) ~ (E) may be installed in constructions of the specimen. Such inclusions shall be stated in the test report. (b) The material used in the test shall not be replaced by any other materials that have not been tested in accordance with FTP Code and/or accepted by the Society. (2) Thermal radiation through windows (A) Where thermal radiation through windows is required to be limited by the Society, the window assembly may be tested and evaluated in accordance with IMO FTP Code Appendix 3. (B) The cotton-wool pad need not be used on the unexposed face after the period relevant to the insulation classification of the product.

(7) A fire door of marginally larger dimensions
Method of evaluation and testing about fire doors larger than the standard specimen size (2,440 mm wide and 2,500 mm high) as specified in part 3 of the FTP Code is to comply with the following requirements.
(A) If such doors can be accommodated into a larger test furnace, it is recommended to conduct a test with the full size specimen of the door; or
(B) It is recommended to use the following method for evaluation of the fire performance of the door and approval of the door may be used.

(a) Fire doors of marginally larger dimensions
A fire door of marginally larger dimensions than a fire door tested in accordance with the FTP Code may be individually assessed and accepted for a specific project with the same classification, provided all of the following are met:
(i) Dimensions (width, height) are not more than 15 % above those of the fire door tested in accordance with the FTP Code
(ii) The surface area of the door is not more than 10 % above that of the fire door tested in accordance with the FTP Code
(iii) The door design does not deviate in any other aspect from the fire door tested in accordance with the FTP Code.
(iv) The tested door has successfully satisfied both insulation and integrity criteria for the following times, as appropriate.

Class divisions	Insulation (min)	Integrity (min)
B-0	0	36
B-15	18	36
A-0	0	68
A-15	18	68
A-30	36	68
A-60	68	68

(b) Fire doors larger than those in the above (a), but not exceeding 50 % in surface area of a fire door tested in accordance with the FTP Code.
(i) An engineering assessment can be used to extrapolate the fire test results of a fire door tested in accordance with the FTP Code to apply to a door larger than those in the above (a), but not exceeding 50 % in surface area of a fire door tested in accordance with the FTP Code.
(ii) Such an assessment can be accepted for verification, only if the dimensions of the door in question are greater than the maximum permitted and the results from tested door have been found satisfactory in accordance with FTPC Annex 1, Part 3.
(iii) The methodology used to extrapolate the fire tests results shall include the following three steps
① Standard fire test of the “pecimen”to obtain reference temperature and structural displacements. Such a “specimen” may be either
- A door already certified through the fire test which is identical in design to the door to be analysed (fire test to include additional instrumentation as per paragraph (iv) ⑤) or
- A specially-built specimen where the finite element method is to be performed to extrapolate the results of a specimen for a door having a size exceeding the maximum size allowed by the furnace of the testing laboratory; the specimen should be a mock-up of the door in question, but having a size that fits in the furnace.
② Finite element analysis in paragraph (vi), of the “specimen”to calibrate the thermal and mechanical boundary conditions of the FEM model, which are adjusted until the numerical and experimental temperature and displacement distribution compare satisfactorily
③ Finite element analysis in paragraph (v), of the door in question carried out using the model calibrated as per paragraph (vii), assuming that the differences in the geometry and dimensions between the actual door and the specimen door do not significantly influence the results.
(iv) In order for the analysis to be carried out, the following information should be submitted
① Detailed drawings of the door, the door frame and the closure and locking devices including clearances and interferences

② Test report of the prototype used to extrapolate the results.
③ Mechanical characteristics of all materials used for the construction of the door and its insulation
- Young' module
- Yield strength
- Density

④ Thermal properties
- Thermal expansion coefficient
- Thermal conductivity
- Specific heat.

⑤ Since the properties in the above ③, ④ are temperature dependent, it is necessary that the required data be given as a function of the temperature range foreseen for the fire tests. Where it is not possible to obtain experimental data, an engineering evaluation shall be submitted with the supporting documentation for the proposed curves of variation of mechanical and thermal characteristics as a function of the temperature in the considered range.

(v) Method of analysis

The comparison of the fire resistance of doors having larger geometry shall be carried out in two steps:

① Evaluation of the heat transmission through the specimen thickness and of the temperature on the unexposed specimen surface
② Evaluation of the strength characteristics and of the displacements of the structural members of the specimen.

(vi) Heat transmission analysis

① By carrying out finite element calculations, the histories over time of the heat transmission within the structural assembly are computed and the temperature is compared with the temperature experienced by the assembly represented in the standard fire test.
② Based on suitable data for the temperature-dependent variables, an iterative procedure is used for the evaluation of thermal-mechanic properties.
③ The thermal boundary conditions of convecting and radiative type are:

$$q_c = h_c(T_S - T_\infty) \quad \text{and} \quad q_r = \sigma_\varepsilon(T_S{}^4 - T_\infty{}^4)$$

where:

q_c and q_r : Convective and radiative heat flux, respectively
h_c : Convective heat transfer coefficient
σ : Stefan-Boltzmann constant
ε : Emissivity coefficient
T_S : Surface temperature
T_∞ : Furnace or ambient temperature.

④ The two equations can be included in an equivalent boundary condition:

$$q = H_{eq}(\sigma, \varepsilon, T_s, T_\infty)(T_s - T_\infty)$$

The equivalent coefficient H_{eq} depends on the unknown surface temperature. However, it can be calculated as part of the finite element analysis using an emissivity coefficient appropriately calibrated with the fire test results.

⑤ The equivalent heat transfer coefficient can be assumed to be constant on the single exposed surface, as the furnace assembly built in accordance with the FTP Code gives uniformity of the temperature and heat flux within the furnace.
⑥ Alternatively, the temperature distribution measured on the specimen of the standard fire test can be directly applied on the finite element structural model taking into account the same time histories.

(vii) Structural analysis

① Using the results of the heat transmission analysis and information on temperature dependent material properties, the thermal stresses and deformations on the geometry are evaluated. When modelling the structural assembly, attention should be paid to using a sufficient number of elements to account for the non-uniform temperature distribution within the member and to catch the non-linear temperature-dependent behaviour.

② Once the model is prepared, the analysis is to be carried out stepwise. For each element, the incremental strain or deformation caused by a temperature increase is calculated and a new stress level is obtained based on the stress-strain relationship applicable for that particular temperature increase.

③ The mechanical boundary conditions are to be congruent in order to represent the real interaction of the door with the external frame for the overall length of the test.

(c) Larger fire doors exceeding 50 % in surface area of a fire door tested in accordance with the FTP Code

(i) For larger doors exceeding 50 % in surface area of a fire door tested in accordance with the FTP Code, a full analysis is to be performed as per SOLAS regulation II-2/17.

(ii) The approach shall be based on the results of the fire test of the door having the maximum dimensions permitted according to the procedure described in the above (b).

(8) Additional testing and approval of pipe penetrations and cable transits for use in "A" class divisions

(A) Arrangement(Application)

(a) "A"-class pipe penetration and cable transits that are constructed without structural sleeves of minimum 3 mm thickness and minimum 60 mm length welded or bolted to the division; and/or

(b) "A"-class pipe penetrations and cable transits that are constructed with removable, soft or intumescent filling material

(B) Additional testing/design criteria

(a) Filling materials shall be adequately secured by bonded materials or mechanical means that cannot be removed without the use of tools in order to prevent damage by normal ship vibrations and pressures.

(b) The pipe penetration/cable transit shall not have any visible openings. It shall not be possible to manually penetrate any part of the penetration with a 6 mm gap gauge, as described in paragraph **7.10** of **2010 FTP Code, Annex 1, Part 3, Appendix 1**.

(C) Approval

Penetrations in structural divisions shall not impair the structural strength of the division. The structural make-up of the penetration is to be fully described so that its use and the need for additional stiffening for the division can be fully assessed.

(9) Others

Details of test for “A” and “B” class divisions not specially mentioned in **2604. 2** are to comply with **FTP Code, Annex 1, Part 3.**

3. Test for surface flammability

Test for surface flammability are to comply with the requirements specified in **Table 3.26.7.** (refer to **FTP Code, Annex 1, Part 5** and **IMO Res. MSC. 307(88)**)

Table 3.26.7 Surface flammability test

Item	Test method
Application	Where a product is required to have a surface with low flame-spread characteristic, the product is to comply with the requirements below.
Test specimens	(A) Number required (a) Specimens required : At least six specimens shall be provided for each different exposed surface. (b) Required number for the test : Three specimens shall be tested for each different exposed surface of the product evaluated and applied. (B) Dimension (a) The specimens are to be 155^{+0}_{-5} mm wide by 800^{+0}_{-5} mm long, and be representative of the product. (b) Specimen thickness: materials and composites of normal thickness 50 mm or less are to be tested using their full thickness. For materials and composites of normal thickness greater than 50 mm, the required specimens are to be obtained by cutting away the unexposed face to reduce the thickness to 50^{+3}_{-0} mm. (C) Substrate (a) Substrate of surface material and floor coverings Materials and composite materials shall be tested using their full thickness, attaching them, by means of an adhesive if appropriate, to the substrate to which they will be attached in practice. The test specimen shall reflect actual application.

Table 3.26.7 Surface flammability test

Item	Test method
Test specimens	(b) Substrate of primary deck covering The specimens shall be applied to a steel plate having a thickness of $3^{+0.3}_{-0.3}$ mm. The specimens shall have a nominal thickness ; the components and construction of the primary deck covering shall reflect actual application. (D) Composite materials (a) Assembly is to be as specified in (B) above. However, where thin materials or composites are used in the fabrication of an assembly, the presence of an air gap and/or the nature of any underlying construction may significantly affect the flammability characteristics of the exposed surface. The influence of the underlying layers is to be recognized and care taken to ensure that the test result obtained on any assembly is relevant to its use in practice. (b) Vapour barriers used in conjunction with installation shall be tested without any other components that will shield the barrier being tested from the radiant panel. The substrate of the specimen shall reflect actual application on ships. (E) Metallic facings If a bright metallic faced specimen is to be tested, it shall be tested as it is. (F) Marking specimens A line is to be marked centrally down the length of the face to be tested of each specimen. Caution is to be exercised to avoid the use of a line which would influence specimen performance. (G) Conditioning of specimens Before test, the specimens are to be conditioned to constant moisture content, at a temperature of 23 ± 2°C, and a relative humidity of 50 ± 5 %. Constant moisture content is considered to be reached when, following two successive weighing operations, carried out at an interval of 24 hours, the measured masses do not differ by more than 0.1% of the mass of the specimen.
Duration of test	The test is to be terminated, the specimen removed, and the dummy specimen in its holder re-inserted when any one of the following is applicable: (A) the specimen fails to ignite after a 10 minutes exposure; (B) 3 minutes have passed since all flaming from the specimen ceased or 10 min. exposure, whichever is longer.
Conditions of retest	(A) In the event of failure, during test of one or more specimens, to secure complete flame spread times or a reasonable heat release curve, the data secured are to be rejected and a new test or tests performed. Such failures might involve, but not be limited to, incomplete observational data or malfunction of data logging equipment. Excessive stack signal baseline drift is also to require further equipment stabilization and retest. (B) If a specimen shows extensive loss of incompletely burned material during test, at least one additional specimen, restrained in the testing frame by poultry netting, is to be tested and the data secured to be reported separately. (C) The following procedures shall be taken in relation to the behavior of the specimen during the test. (a) if the pilot flame extinguishes : report occurrence and reject data and repeat test ; or (b) if the specimen breaks up and falls out of the specimen holder, report the behavior, but classify on basis of worst performance with and without specimen restraint in the above (B)
Observations during the test	In addition to the recording of the experimental data, observations are to be made and recorded on the behaviour of the specimen including but not limited to flashing, unstable flame front, sparks, glowing, charring, melting, flaming drips, disintegration of the specimen, fissures, fusion, change in form.

Table 3.26.7 Surface flammability test (continued)

<table>
<tr><th colspan="2">Item</th><th>Test method</th></tr>
<tr><td rowspan="5">Derived fire characteristics</td><td>General</td><td>Experimental results are to be reported in terms of the thermal baseline of the output from the thermocouple circuit and measurements of incident heat flux measured with a dummy specimen in place. The results are not to be adjusted to compensate for changes in the thermal output of the radiant panel and the pilot flame during the conduct of the test. The following data are to be derived from the test results.</td></tr>
<tr><td>Heat for ignition</td><td>The product of the time from initial specimen exposure until the flame front reaches the 150 mm position and the flux level at this position, this latter obtained in prior calibration of the apparatus.</td></tr>
<tr><td>Heat for sustained burning</td><td>The product of time from the start of exposure of a specimen to the arrival of the flame front at a specified position and the incident flux corresponding to that position measured on a non-combustible calibration board. This shall be calculated for each station starting at the 150 mm station, but it shall not be calculated for a given station unless the flame propagates more than halfway to the next station as viewed along the centreline of the specimen.</td></tr>
<tr><td>Average heat for sustained burning</td><td>(A) An average of the values for the characteristic defined in the above measured at different stations, the first 150 mm and then at subsequent stations at 50 mm intervals through the final station or the 400 mm station, whichever is the lower.
(B) For each specimen where the flame front does not reach the 175 mm position, the heat of sustained burning in not defined. If the heat of sustained burning is not defined for one specimen, Qsb is calculated using the data from the other two specimens. If the heat of sustained burning is not defined for two specimens, Qsb is calculated using the data from the third specimen. If the heat of sustained burning is not defined for all three specimens, Qsb is undefined and the criterion of Qsb is deemed to have been met.</td></tr>
<tr><td>Critical flux at extinguishment</td><td>A list of the values of this characteristic for the specimens tested and the average of these values</td></tr>
<tr><td></td><td>Heat release of the specimen</td><td>Both a heat release time curve and a listing of the peak and total integrated heat release are to be secured from the experimental data.
(A) The total heat release is given by integration of the positive part of the heat release rate during the test period.
(B) The peak heat release rate is the maximum of the heat release rate during the test period.</td></tr>
<tr><td colspan="2">Classification</td><td>Materials giving average values for all of the surface flammability criteria that comply with the values as listed in Table below, are considered to meet the requirement for low flame spread in compliance with the relevant regulations in chapter II-2 of the International Convention for the Safety of Life at Sea, 1974.
<table>
<tr><th></th><th>Bulkhead, wall and ceiling linings</th><th>Floor coverings</th><th>Primary deck coverings</th></tr>
<tr><td>CFE (kW/m^2)</td><td>≥ 20.0</td><td>≥ 7.0</td><td>≥ 7.0</td></tr>
<tr><td>Q_{sb} (MJ/m^2)</td><td>≥ 1.5</td><td>≥ 0.25</td><td>≥ 0.25</td></tr>
<tr><td>Q_t (MJ)</td><td>≤ 0.7</td><td>≤ 2.0</td><td>≤ 2.0</td></tr>
<tr><td>Q_p (kW)</td><td>≤ 4.0</td><td>≤ 10.0</td><td>≤ 10.0</td></tr>
<tr><td>Burning droplets</td><td>Not produced</td><td>No more that 10</td><td>Not produced</td></tr>
<tr><td colspan="4">Where, CFE = Critical flux at extinguishment, Q_{sb} = Heat for sustained burning
Q_t = Total heat release, Q_p = Peak heat release rate</td></tr>
</table></td></tr>
<tr><td colspan="2">Other reference</td><td>Surface materials are to comply with 4 below.</td></tr>
<tr><td colspan="2">Others</td><td>Details of test for surface flammability not specially mentioned in 2604. 3 are to comply with FTP Code, Annex 1, Part 5.</td></tr>
</table>

4. Smoke and toxicity test

Smoke and toxicity test are to comply with the requirements specified in **Table 3.26.8.** (refer to **FTP Code, Annex 1, Part 2** and **Part 5, Annex 4**)

Table 3.26.8 Smoke and toxicity test

Item		Test method
Application		Where a material is required not to be capable of producing excessive quantities of smoke and toxic products or not to give rise to toxic hazards at evaluated temperatures, the material is to comply with the requirements below.
Test specimen		Preparation of test specimen is to be in accordance with the practice outlined in **IMO FTPC, Annex 1, Part 5, Appendix 4.**
Test conditions		Irradiance to the specimen during the test shall be kept constant. Three specimens are to be tested under each of the following conditions: (A) irradiance of 25 kW/m^2 in the presence of pilot flame; (B) irradiance of 25 kW/m^2in the absence of pilot flame; and (C) irradiance of 50 kW/m^2 in the absence of pilot flame;
Duration of tests	Smoke	The initial test at each test condition shall last for 20 min. to verify the possible existence of a second minimum transmittance value. If the minimum transmittance value is shown by the initial test to occur within the first 10 min. then subsequent tests for that test condition may have an exposure of 10 min. Otherwise, the tests shall last 20 min.
	Toxicity	Continue the smoke density test until a 20 min. period has elapsed.
Classification criteria	Smoke	An average (D_m) of the maximum of specific optical density of smoke ($D_{s\max}$) of three tests at each test condition is to be calculated. - for materials used as surface of bulkheads, linings or ceilings, the D_m is not to exceed 200 in any test condition; - for materials used as primary deck covering, the D_m is not to exceed 400 in any test condition; - for materials used as floor covering, the D_m is not to exceed 500 in any test condition; and - for plastic pipes and electric cables, the D_m is not to exceed 400 in any test condition.
	Toxicity	The average value of the maximum value of the gas concentration measured at each test condition is not to exceed the follow limits: - *CO* 1450 ppm - *HBr* 600 ppm - *HCl* 600 ppm - *HCN* 140 ppm - *HF* 600 ppm - *SO2* 120 ppm (200 ppm for floor coverings) - *NOx* 350 ppm
Additional requirements		Paints, floor coverings, primary deck coverings, varnishes and other finishes used on exposed interior surfaces are also to be applicable to the above **2604. 3**, Surface flammability test
Others		Details of test for surface flammability not specially mentioned in **2604. 4** are to comply with **FTP Code, Annex 1, Part 2.**

5. Test of curtains, etc.

Test of curtains, etc. are to comply with the requirements specified in **Table 3.26.9** (refer to **FTP Code, Annex 1, Part 7** and **IMO Res. MSC. 307(88)**)

Table 3.26.9 Test of curtains, etc.

Item		Test method
Application		Where draperies, curtains and other supported textile materials are required to have qualities of resistance to the propagation of flame, not inferior to those of wool of mass 0.8 kg/m^2, they shall comply with the requirements below.
Test specimens	Preparation	The specimens are to be as representative as possible of the material provided and are to exclude salvages. At least ten specimens are to be cut, each measuring 220 mm × 170 mm, five in the direction of the warp, five in the direction of the weft. Where the fabric has differing surfaces on the two sides enough samples are to be cut for both surfaces to be tested. Using a template 220 mm × 170 mm, with holes approximately of 5 mm diameter located on the template at the position of the pins on the frame, each specimen is to be laid flat on a bench and premarked /punctured, to ensure a repeatable and reproductive tension of the specimen, after mounting on the frame.
	Conditioning	The specimens are to be conditioned at 20 ± 5°C and 65 ± 5 % relative humidity for not less than 24 hours before test. Each specimens are to be removed from the conditioning atmosphere and either tested within 3 min. or placed in a sealed container until required.
	Exposure procedures	If the material have not permanent fire-retardant treatment or is not inherently flameproof, one of the exposure procedures detailed in **Appendix 3** of **IMO Res. MSC. 307(88)** may be applied to at least ten further specimens.
Observations during the test		(A) Afterglow times and any evidence of surface flash are to be noted. If afterglow is observed to occur during a test, the specimen is to be allowed to remain in place until all glowing has ceased. The extent of char is also measured in accordance with **Appendix 2** of **IMO Res. MSC. 307(88).** (B) To investigate if burning drops of thermoplastic materials are capable of igniting combustible materials on the base of the apparatus, cotton wool is to be laid to a depth of 10 mm over the base plate, immediately below the specimen holder. Note is to be made of any ignition or glowing of the cotton wool.
Criteria		(A) Products which show any of the following characteristics shall be considered unsuitable for use as curtains, draperies, or free-hanging fabric product for use in rooms containing furniture and furnishings of restricted fire risk as defined in **SOLAS Ⅱ-2, Reg. 3, 40** (a) An afterflame time greater than 5 seconds for any of the 10 or more specimens tested with surface application of the pilot flame. (b) Burn-through to any edge of any of the 10 or more specimens tested with surface application of the pilot flame. (c) Ignition of cotton wool below the specimen in any of the 10 or more specimens tested. (d) An average char length in excess of 150 mm observed in any of the batches of fire specimen tested by either surface or edge ignition. (e) The occurrence of a surface flash propagating more than 100 mm from the point of ignition with or without charring of the base fabric. (B) If, following analysis of the experimental data from tests of a fabric, it is found that either or both of the batches of five specimens cut in both warp and weft directions fail to meet one or more of the criteria specified in (a), (b), (c) and (e) of (A) above because of poor performance of only one of the five specimens tested, one complete retest of a similar batch is permitted. Failure of the second batch to meet any of the criteria is to provide the basis for rejection of the fabric for use.
Additionally requirements		The tests are to be made by using specimens of the final product (e.g. with colour treatment). In cases where only the colours change, a new test is not necessary. However, in cases where the basis product or the treatment procedure change, a new test is required.
Others		Details of test for curtains, etc. not specially mentioned in **2604. 6** are to comply with **FTP Code, Annex 1, Part 7.**

6. Test for upholstered furniture

Test for upholstered furniture are to comply with the requirements specified in **Table 3.26.10.** (refer to **FTP Code, Annex 1, Part 8** and **IMO Res. MSC. 307(88)**)

Table 3.26.10 Test for upholstered furniture

Item		Test method
Application		Where upholstered furniture are required to have qualities of resistance to the ignition and propagation of flame, the upholstered furniture are to comply with the requirements below.
Test pieces	General	The test piece materials are to be representative of the cover, filling and any other components to be used in the final assembly.
	Cover material and fabric interliner	The cover size needed for each test is 800 ± 10 mm × 650 ± 10 mm. The long dimensions are to be cut parallel to the selvage. The cover may be constructed from smaller pieces of material provided that the resulting seams are not located within 100 mm of the area likely to be affected by the test. Where a fabric interliner is used, it is to be cut to the same dimensions and in the same orientation as the cover for fitting to the test rig under the cover.
	Upholstery filling	Two pieces, one 450 ± 5 mm × 300 ± 5 mm × 75 ± 2 mm thick, and the other 450 ± 5 mm × 150 ± 5 mm × 75 ± 2 mm thick are required for each test.
Atmosphere for conditioning and testing	Conditioning	The materials to be tested and the cigarettes are to be conditioned immediately before the test for 72 hours in indoor ambient conditions and then for at least 16 hours in an atmosphere having a temperature of 23 ± 2°C and a relative humidity of 50 ± 5 %.
	Testing	For testing, a substantially draught-free environment, having a temperature of 20 ± 5°C and relative humidity of 20 % to 70 %, is to be used.
Criteria	Smouldering cigarette test	(a) If progressive smouldering of flaming of the upholstery components is observed at any time within a period of 1 hour of the placement of the cigarette, extinguish the test pieces and record a fail result for the smouldering cigarette test. (b) If progressive smouldering or flaming is not observed within the 1 hour period, or if the cigarette fails to smoulder its complete length, repeat the test with a new cigarette placed in a fresh position not less than 50 mm from any previous test damage. If progressive smouldering or flaming is not observed in this retest, or if the cigarette fails to smoulder its complete length, record a pass result for the smouldering cigarette test unless the test piece fails the final examination specified in the final examination below.
	Butane flame test	(a) Allow the gas to burn for a period of 20 ± 1 seconds, then terminate by carefully removing the burner tube from the test pieces. Observe for flaming or progressive smouldering in the interior and/or cover. Disregard flames, afterglow, smoking or smouldering that cease within 120 seconds of the removal of the burner tube. If flaming or progressive smouldering of the upholstery components is observed, extinguish the test pieces. Record a fail result for the butane flame ignition source test. (b) If progressive smouldering or flaming is not observed, repeat the test at a fresh position not less than 50 mm from any previous test damage. If flaming or progressive smouldering is not observed in this retest, record a pass result for the butane flame ignition source test unless the test piece fails the final examination specified in the final examination below.
	Final examination	Where the tests specified in the smouldering cigarette test and butane flame test above are passed, immediately after completion of the test programme on the assembly, dismantle and examine it internally for progressive smouldering. If this is present, extinguish the test piece and record a fail result for the relevant test source.
Additionally requirements		The tests are to be made by using specimens of the final product (e.g. with colour treatment). In cases where only the colours change, a new test is not necessary. However, in cases where the basis product or the treatment procedure change, a new test is required.
Others		Details of test for upholstered furniture not specially mentioned in **2604. 7** are to comply with **FTP Code, Annex 1, Part 8.**

7. Bedding components

Test for Bedding components are to comply with the requirements specified in **Table 3.26.11.** (refer to **FTP Code, Annex 1, Part 9** and **IMO Res. MSC. 307(88)**)

Table 3.26.11 Test for bedding components

Item		Test method
Application		Where bedding components are required to have qualities of resistance to the ignition and propagation of flame, the bedding components are to comply with the requirements below.
Specimens	General	The specimens are to be representative of the whole product to be tested. If possible, the specimens are to be taken in such a way that ignition can also be started along seams and their intersections. The top side is exposed. Where there is doubt as to which side is the top side, the test is to be carried out on both sides. Four additionally specimens are then needed.
	Mattresses	Sufficient material is to be available for making at least for specimens with dimensions 450 mm × 350 mm in full nominal thickness. The cover is to envelop the mattress completely without wrinkles and is to be secured underneath (for instance with steel pins). For testing of mattresses with removable covers, sufficient material is to be available for the making of at least eight specimens, four with and four without the mattress cover, with dimensions 450 mm × 350 mm in full nominal thickness.
	Pillows	Four samples in full size are to be available.
	Other than mattresses and pillows	Four specimens each of size 450 mm × 350 mm are to be cut from each sample.
Preparation of specimens		If the blankets, quilts, pillows, thin light mattresses or removable covers are sold as flame retardant, they are to be tested after three cleaning treatments carried out according to instructions given by the manufacturer, the commercial detergent or in accordance with a procedure described in International Standard **ISO 6330.**
Conditioning		The materials to be tested, the cigarette used as ignition sources, the insulating cotton wool pads are to be conditioned immediately before testing for 72 hours in indoor ambient conditions and then for at least 16 hours in an atmosphere having a temperature of 23 ± 2°C and 50 ± 5% relative humidity.
Testing		The test is carried out indoors, in an environment essentially free of air currents. The room temperature is to be 20 ± 5°C and 20 to 70% relative humidity.
Criteria for ignitability	Progressive smouldering	All the types of behaviour described below are considered to be progressive smouldering ignition: (a) any test specimen that procedures externally detectable amounts of smoke, heat or glowing after a period of 1 hour following the application of the ignition source; (b) any test specimen that displays escalating combustion behaviour, so that it is unsafe to continue the test and requires forcible extinction; (c) any test specimen that smoulders until it is essentially consumed within the duration of the test; (d) any test specimen that smoulders to the extremities of the specimen, viz. to either side or to the full thickness of the specimen, within the duration of the test. However, all materials having a thickness of 25 mm or less, such as light mattresses, quilts and blankets are allowed to smoulder to the full thickness of the specimen; (e) any test specimen that, on final examination, shows evidence of smouldering other than discoloration more than 25 mm in any horizontal direction from the nearest part of the original position of the edge of cotton wool pad and open flame ignition source.
	Flaming ignition	(a) Mattresses All the types of behaviour described below are considered to be flaming ignition: - the occurrence of any flames initiated by a smouldering ignition source; - any test specimen that continues to flame for more than 150 seconds after removal of the igniting flame; - any test specimen that displays escalating combustion behaviour, so that it is unsafe to continue the test and requires forcible extinction; - any test specimen that burns until more than 66 % consumed with 150 seconds after removal of the ignition flame; - any test specimen that burns to the extremities of the specimen, viz. to either side or to the full thickness of the specimen, within the duration of the test.

Table 3.26.11 Test for bedding components (continued)

Item		Test method
Criteria for ignitability	Flaming ignition	(b) Blankets, quilts, pillows and thin light mattresses All the types of behaviour described below are considered to be flaming ignition: - the occurrence of any flames initiated by a smouldering ignition source; - any test specimen that continues to flame for more than 150 seconds after removal of the igniting flame; - any test specimen that displays escalating combustion behaviour, so that it is unsafe to continue the test and requires forcible extinction; - any test specimen that burns until more than 66 % consumed with 150 seconds after removal of the ignition flame; - any test specimen that burns to either side of the specimen within the duration of the test.
	Classification	The bedding component is classified as not readily ignitable if it show no progressive smouldering ignition or flaming ignition as specified above.
Additionally requirements		The tests are to be made by using specimens of the final product (e.g. with colour treatment). In cases where only the colours change, a new test is not necessary. However, in cases where the basis product or the treatment procedure change, a new test is required.
Others		Details of test for bedding components not specially mentioned in **2604. 8** are to comply with **FTP Code, Annex 1, Part 9.**

8. Test for fire door control systems

Test for fire door control systems are to comply with the requirements specified in **Table 3.26.12.** (refer to **FTP Code, Annex 1, Part 4** and **IMO Res. MSC. 307(88)**)

Table 3.26.12 Test for fire door control systems

Item	Test method
Application	Where a control system of fire door is required to be able to operate in case of fire, the system is to comply with the requirements below.
Fire test procedure and classification criteria	Fire test procedure and classification criteria are to comply with **FTP Code, Annex 1, Part 4.**
Additional requirements	Insulation materials used in connection with a fire door control system are to comply with **2604. 1** above.
Others	Details of test for fire door control systems not specially mentioned in **2604. 9** are to comply with **FTP Code, Annex 1, Part 4**

APPENDIX 1. BOMB METHOD

1. Test specimens

Three test specimens of approximately 1 g are to be cut out from the test material and the surface area of each test specimen is to be measured accurately. The test specimens are to be dried for more than one hour in a dryer at a temperature of 105°C and then be stored in a desiccator.

2. Equipment, instruments, reagents, combustion improvers and operations. A Nenken-A type flowmeter (insulation system) and a Nenken-B type flowmeter (insulation system) specified in **KS E 3707** (Determination of calorific value of coal and coke) or those having the equivalent characteristics are to be used as equipment and instruments for the test. The reagent, combustion improver and operating method are also to conform to the requirements of **KS E 3707** (Determination of calorific value of coal and coke).

3. Calculation of calorific value

The calorific value is to be calculated to the second decimal place and rounded off the first decimal place from the following formula.

$$\text{Calorific value } (\mathrm{MJ/m^2}) = \frac{\text{Temperature rise } °\mathrm{C} \times (\text{internal cylinder water(g)} + \text{water equivalent(g)})}{\text{surface area of test sample } (\mathrm{m^2})} \times 4.186 \times 10^{-6}$$

The average value of calorific values of the three specimens are to be used as the calorific value of the specimens.

2605. Manufacturer approval

The manufacturer is to be subjected to Manufacturer approval in accordance with **Ch 6**.

Section 27 Materials for Refrigerated Chambers and Oil-impervious Composition

2701. Application

1. The requirements in this Section apply to tests and inspection for the type approval of materials intended to be used for insulating the refrigerated chambers and oil-impervious composition provided for the surface oil tanks adjacent refrigerated chambers in accordance with the requirements of **Pt 9, Ch 1, 502. 1** and **3** of the Rules.
2. For materials for refrigerated chambers of ships carrying liquefied gases in bulk in accordance with the requirements of **Pt 7, Ch 5, Sec 4** of the Rules, the requirements of this Section are correspondingly applied.

2702. Data to be submitted

The following reference data are to be submitted to the Society in addition to those specified in **102.**

(1) Process of manufacture
(2) Installation procedures on board (including precautions for working if any)
(3) Painting procedures of oil-impervious covering
(4) Packaging and marks (labels, symbol, etc.)
(5) Physical properties of products assured by the manufacturer
(6) Storage method of products
(7) Service records

2703. Type tests

1. General

(1) The type tests specified in **Par 2** or **3** are to be carried out in the presence of the Surveyor where the submitted documents are considered acceptable.
(2) Applicants are to submit the test plan describing the test place, testing procedure, etc., in advance.
(3) It is recommended that the above test plan is submitted with application form letter.
(4) Test samples are to be picked out, in general, from the products by the direction of the Surveyor upon the survey at confirmation survey.
(5) Three copies of the test record are to be submitted to the Society.
(6) The type tests may be omitted when the test is carried out at a recognized testing organization and the test records are to be submitted to the Society.

2. Insulation materials

(1) The items represented by mark O in **Table 3.27.1** are to be tested for the insulation materials. However, materials not given in the table are to be considered in each case.

Table 3.27.1 Type Test Items of Insulation Materials

Main materials	Thermal conductivity	Density	Bending strength	Compressive strength	Water absorption	Water content	Combustion test	Others	*KS*
Mineral wool	○	○						Heat shrinkage, Particle content	**L 9102**
Glass wool	○	○	○					Heat shrinkage	**L 9102**
Calcium silicate	○	○	○					Water repellency and shrinkage	**L 9101**
Foam polystyrene	○	○	○	○	○		○	Water vapor permeability	**M 3808**
Pearlite	○	○	○					Water repellency and shrinkage	**F 3701**
Rigid foam urethane	○	○	○	○	○		○	Water vapor permeability and rust test	**M 3809**

(2) Testing procedure and acceptance criteria
The testing procedures are to be in accordance with the requirements of KS or other recognizant standards, and acceptance criteria are to be as belows.
(A) Acceptance criteria for mineral wool is to be as specified in **Table 3.27.2.**

Table 3.27.2 Test items and acceptance criteria for Mineral wool

Kind			Density		Thermal conductivity (W/m · K) (Ave. temp. 70±5℃)	Heat shrinkage (℃)	Diameter of fibre μm	Particle content (%)
			kg/m³	allowance				
Mineral wool			40~150		Max. 0.044	Min. 650	Max. 7	Max. 4
Insulation board	No.1		71~100	-15%	Max. 0.044	Min. 600	-	-
	No.2		101~160		Max. 0.043			
	No.3		161~300		Max. 0.044			
Felt			40~70		Max. 0.049	Min. 400		
Insulation band	No.1		71~100		Max. 0.052	Min. 600		
	No.2		101~160		Max. 0.049			
Blanket	No.1	a	40~70		Max. 0.049	Min. 400		
		b	71~100		Max. 0.044	Min. 600		
	No.2		101~160		Max. 0.043			
Insulation pipe cover			40~200		Max. 0.044			

(B) Acceptance criteria for glass wool is to be as specified in **Table 3.27.3.**

Table 3.27.3 Test items and acceptance criteria for glass wool

Kind			Density		Thermal conductivity (W/m · K) (Ave. temperature 70±5℃)	Heat shrinkage ℃
			kg/m³	allowance		
glass wool	No. 2		-	-	Max. 0.042	Min. 400
	No. 3		-	-	Max. 0.049	
Insulation board	No. 2	24k	24	+3, -2	Max. 0.049	Min. 300
		32k	32	±4	Max. 0.046	
		40k	40	+4 -3	Max. 0.044	Min. 350
		48k	48	+4, -3	Max. 0.043	
		64k	64	±6	Max. 0.042	Min. 400
		80k	80	±7		
		96k	96	+9, -8		
		120k	120	±12		
	No. 3	80k	80	±7	Max. 0.047	
		96k	96	+9, -8		
		120k	120	±12		
blanket	No. 2	a	24~40		Max. 0.048	Min. 350
		b	41~120		Max. 0.043	Min. 400
Insulation band	No. 2	a	22~36		Max. 0.052	Min. 300
		b	37~52			Min. 350
		c	58~132			Min. 400
Insulation pipe cover			40~90		Max. 0.043	Min. 350

(C) Acceptance criteria for calcium silicate is to be as specified in **Table 3.27.4.**

Table 3.27.4 Test items and acceptance criteria for calcium silicate

Kind	Density kg/m^3	Thermal conductivity (W/m・K) (Ave. temperature 70±5℃)	Bending strength N/cm^2	Shrinkage %	Water repellency(2) %
Board No.1-13 Pipe Cover No.1-13	Max. 130(1)	Max. 0.049	Min. 20	Max. 2.0 free from spitting and/or twisting	Min. 98.0
Board No.2-17 Pipe Cover No.2-17	Max. 170	Max. 0.055	Min. 20		
Board No.1-22 Pipe Cover No.1-22	Max. 220	Max. 0.062	Min. 30		
Board No.2-22 Pipe Cover No.2-22		Max. 0.062	Min. 30		

Notes
1. In case where the thickness of insulation board No.1-13 and pipe cover No.1-13 is not more than 30mm, density can be max. 155 kg/m^3.
2. Not to be applied if water repellency is not required.

(D) Acceptance criteria for foam polystyrene is to be as specified in **Table 3.27.5** and **3.27.6**

(a) Insulation board and pipe cover made by polystyrene bead.

Table 3.27.5 Test items and acceptance criteria for polystyrene bead.

Kind		Density kg/m^3	Thermal conductivity (W/m・K) (Ave. temperature 20±5℃) Class 1	Class 2	Bending strength N/cm^2	Compressive strength N/cm^2	Water absorption g/100 cm^2	Combustion test	Water Vapor Permeability(1) ng/m^2.s.Pa.
Insulation board	No.1	Min. 30	Max. 0.036	Max. 0.031	Min. 35	Min. 16	Max. 1	Flame is to be extinguished without remains within 3 minutes. And not to burn over the combustion limit line.	Max. 146
	No.2	Min. 25	Max. 0.037	Max. 0.032	Min. 30	Min. 12			Max. 208
	No.3	Min. 20	Max. 0.040	Max. 0.033	Min. 22	Min. 8			Max. 250
	No.4	Min. 15	Max. 0.043	Max. 0.034	Min. 15	Min. 5	Max. 1.5		Max. 292
Insulation board	No.1	Min. 35	Max. 0.036	Max. 0.031	Min. 30	-	t ∠ 30 mm : Max. 2, t ≥ 30 mm : Max. 1		-
	No.2	Min. 30	Max. 0.036	Max. 0.032	Min. 25				
	No.3	Min. 25	Max. 0.037	Max. 0.033	Min. 20				

Note
1. To be measured per 25 mm in thickness for reference.

(b) Insulation board and pipe cover made by polystyrene extrusion.

Table 3.27.6 Test items and acceptance criteria for polystyrene extrusion.

Kind		Pressure test N/cm^2	Bending strength N/cm^2	Thermal conductivity (W/m・K) (Ave. temperature 70±5℃)	Combustion test	Water Vapor Permeability(1) ng/m^2.s.Pa
Insulation board	Special	Min. 25	Min. 45	Max. 0.027	Flame is to be extinguished without remains within 3 minutes. And not to burn over the combustion limit line.	Max. 146
	No.1	Min. 18	Min. 35	Max. 0.028		
	No.2	Min. 14	Min. 30	Max. 0.029		
	No.3	Min. 10	Min. 25	Max. 0.031		

Note
1. To be measured per 25 mm in thickness for reference.

(E) Acceptance criteria for Pearlite is to be as specified in **Table 3.27.7.**

Table 3.27.7 Test items and acceptance criteria for pearlite

Kind	Density kg/m^3	Thermal conductivity (W/m・K) (Ave. temperature 70±5℃)	Bending strength N/cm^2	Shrinkage %	Water repellency %
Insulation board (pipe cover) No.1	Max. 200	Max. 0.062	Min. 25	Max. 2.0	Min. 98
Insulation board (pipe cover) No.2	Max. 155	Max. 0.055	Min. 20	Max. 2.0	
High temp. insulation board (pipe cover) No. 1	Max. 250	Max. 0.072	Min. 25	Max. 2.0	Min. 98
High temp. insulation board (pipe cover) No. 2	Max. 185	Max. 0.056	Min. 20	Max. 2.0	

(F) Acceptance criteria for Rigid foam urethane is to be as specified in **Table 3.27.8.**

Table 3.27.8 Test items and acceptance criteria for rigid foam urethane

Kind			Density kg/m^3	Thermal conductivity (W/m・K) (Ave. temp. 20±5℃)	Bending strength N/cm^2	Pressure test N/cm^2	Water absorption g/100 cm^2	Combustion test	Water Vapor Permeability(1) ng/m^2.s.Pa	Rust test
Insulation board	Grade 1	No.1	Min.45	Max. 0.024	Min. 35	Min. 30	Max. 3.0	Burning time is to be within 120 sec. and length is not more than 60mm.	Max. 145	(2)
		No.2	Min.35	Max. 0.024	Min. 25	Min. 20			Max. 185	
		No.3	Min.25	Max. 0.025	Min. 15	Min. 10			Max. 225	
	Grade 2	No.1	Min.45	Max. 0.023	Min. 35	Min. 15		-	Max. 40	
		No.2	Min.35	Max. 0.023	Min. 25	Min. 10			Max. 40	
		No.3	Min.25	Max. 0.024	Min. 15	Min. 8			Max. 40	
Insulation pipe cover		No.1	Min.45	Max. 0.024	Min. 35	Min. 30		-	Max. 145	
		No.2	Min.35	Max. 0.024	Min. 25	Min. 20			Max. 185	
		No.3	Min.25	Max. 0.025	Min. 15	Min. 10			Max. 225	

Note
1. To be measured per 25 mm in thickness for reference.
2. Weight loss is to be not more than the weight loss of specimen without flame retardant. However this value is used as for reference.

(3) Test items and test methods of materials for refrigerated chambers of ships carrying liquefied gases in bulk are to be in accordance with the requirements in **Pt 7, Ch 5** of the Guidance relating to the Rules for the Classification of Steel Ships.

3. Oil-impervious covering

(1) Tank top covering
The test items and testing procedure given in **Table 3.27.9** are to be carried out for the tank top covering.

Table 3.27.9 Type Test Items and Testing Procedure for Tank Top Covering for Oil Tanks

Test item	Test procedures
Odor test	The inner surface of an appropriate container is to be coated with the covering and the outer surface is to be warmed up and kept at 65°C by hot water, etc. It is to be verified whether or not harmful odor is generated.
Bending strength	To be in accordance with **KS F 2407** (Testing method for flexural strength of concrete (Using simple beam with center-point loading))
Compression strength	To be in accordance with **KS F 2405** (Testing method for compressive strength of molded concrete cylinders)
Oil absorption test	Test piece of tank top covering (30 cm × 30 cm) is to be immersed for 24 hours in heavy oil at 65°C and measure the increase of weight. 15% or less of weight increasing is acceptable.
Oil tightness test	The tank top covering is to be coated on the top of steel container where 20 holes of 6 mm diameters are drilled with 100 mm pitch. 0.2 MPa oil pressure is to be applied to the inner surface and be kept for 24 hours. It is to be verified that no oil permeates through the 6 mm holes.
Combustion test	To be in accordance with the combustion test in **2** (2).

(2) Additional tests
The tests are to be carried out in accordance with requirements specified in **Table 3.27.9** In addition to these tests, the tests given in **Table 3.27.10** are to be carried out for the tank side covering.

Table 3.27.10 Approval Test Items and Testing Procedure for Tank Side Covering

Item	Method
Vibration test	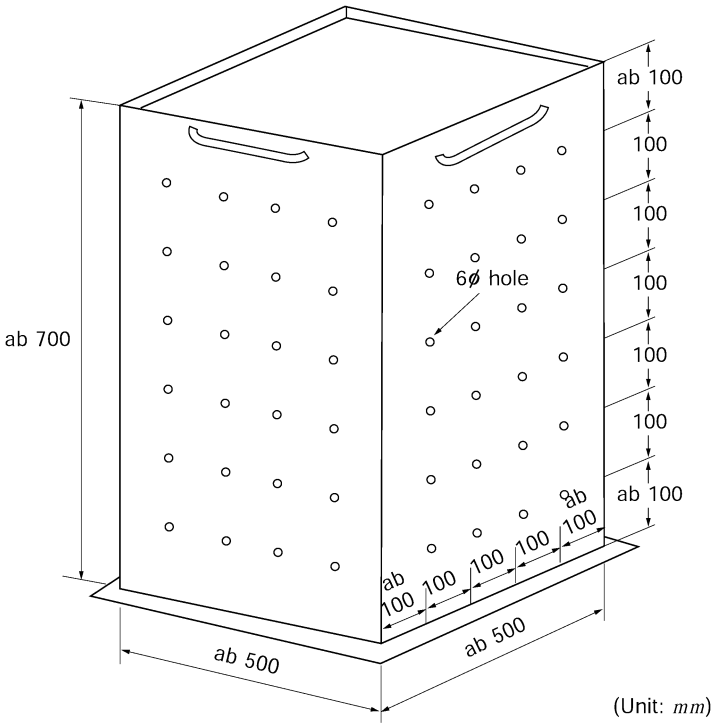
	After the oil tightness test, the container is to be vibrated for 4 hours. (Vibration conditions of approximately 8 Hz frequency and about 0.10 to 0.50 mm half amplitude are to be maintained. After the vibration test, heavy oil is filled up in the container and left for 17 hours. It is to be verified that no leakage of oil and no peeling off of covering occurred.
Hammering test	The inside of the test container is to be patted with a 5 kg hand hammer, and it is to be verified that no crack and no peeling off occurred.
Adhesion test	A test sample is to be bundles up from the surface of the tank and detached by scraper to check adhesion hardness and permeation of fuel oil.
Heating test	The internal surface of the tank is to be heated as follows to check the dissolution conditions of the test sample and the adhesive condition using a scraper. Heating time: 3 minutes Heating temperature: 600 °C Heating area: Approximately 100 mm in diameter

Section 28 Materials of Reinforced Plastics

2801. Application

The requirements of this Section apply to tests and inspections for the type approval of the raw materials (reinforcements, thermosetting resins and core materials for sandwich construction) to be used for FRP ships conforming to the requirements of **Pt 2, Ch 2, Annex 2-8** of the Guidance relating to the Rules for Classification of Steel Ships. **Ch 3, Sec 2** of the Rules for Classification of Fibreglass Reinforced Plastics Ships and **Pt 3, Ch 5, Sec 2** of the Rules and Guidance for the Classification of High Speed and Light Crafts.

2802. Data to be submitted

The following reference data are to be submitted to the Society in addition to those specified in **102.**

1. Thermosetting resins

The data listed in **Table 3.28.1** is to be provided by the manufacturer for each thermosetting resin.

Table 3.28.1 Data requirements for thermosetting resins

Data	Type of resin		
	Polyester(3)	Epoxide	Phenolic
Specific gravity of liquid resin	O	O	O
Viscosity	O	O	O
Gel time	O	O	X
Appearance	O	O	O
Mineral content(1)	O	O	X(2)
Volatile content	O	X	X
Acid value	O	X	X
Epoxide content	X	O	X
Free phenol	X	X	O
Free formaldehyde	X	X	O

Note :
(1) This is to be the total filler in the system, including thixotrope, filler, pigments, etc., and is to be expressed in parts by weight per hundred parts of pure resin.
(2) If the resin is pre-filled, the mineral content is required.
(3) Vinylesters are to be treated as equivalent to polyesters.

2. Reinforcements

The following data is to be provided, where applicable, for each type of reinforcement:

(1) Reinforcement type.
(2) Fibre type for each direction.
(3) Fibre tex value.
(4) Fibre finish and/or treatment.
(5) Yarn count in each direction.
(6) Width of manufactured reinforcement.
(7) Weight per unit area of manufactured reinforcement.
(8) Weight per linear metre of manufactured reinforcement.
(9) Compatibility (e.g. suitable for polyesters, epoxides, etc.).
(10) Constructional stitching - details of yarn, specific gravity, type, frequency and direction.
(11) Weave type.
(12) Binder type and content.
(14) Density of the fibre material.

3. Core materials

The following data is to be provided for each type of core material:

(1) Type of material.
(2) Density.
(3) Description (block, scrim mounted, grooved).
(4) Thickness and tolerance.
(5) Sheet/block dimensions.
(6) Surface treatment.
(7) full application procedure for use of the product.

2803. Type tests

The test items and test methods are to comply with the following requirements and the Flame spread (Fire durability) test in **Table 3.16.1, 1603.** of the Guidance as necessary.

1. Testing procedures

(1) **General**
(A) The test laboratory is to equip the test facilities so that they can perform the testing in accordance with the requirements in this Section and are to be recognized by the Society Alternatively, testing may be carried out by the manufacturer subject to these tests being witnessed by the Surveyor.
(B) The accuracy of test machines is to be within ±1 % and test machines are to be recalibrated at approximately annual intervals. A record of all calibrations is to be kept available in the test laboratory.

(2) **Preparation of test samples**
(A) Samples of thermosetting resins are to be prepared using the curing system recommended by the manufacturer and identical with that used for the finished product.
(B) The post curing conditions for samples of thermosetting resins are to be as recommended by the manufacturer and identical with those used for the finished product.
(C) Where curing of the product is intended to take place at room temperature, the sample is to be allowed to cure at room temperature (18 to 21 °C) for 24 hours followed by a post-cure at 40 °C for 16 hours.

(3) **Preparation of test specimens**
(A) The test specimen is to be prepared in accordance with the appropriate ISO standard and the requirements of this Section.
(B) Precautions are to be taken during machining to ensure that the temperature rise in the specimen is kept to a minimum.

(4) **Testing**
(A) Strain measurement are to be made by the use of a suitable extensometer or strain gauge.
(B) The number of test specimens from each sample to be tested is to be in accordance with the ISO standard. For mechanical testing this is five.
(C) If a test specimen fails because of faulty preparation or incorrect operation of the testing machine it is to be discarded and replaced by a new specimen.
(D) If the deviation of one result in a group of five exceeds the mean by more than two standard deviations, that result is to be discarded and one further specimen tested.

(5) **Reporting of results**
(A) All load/displacement graphs and tabulated results are to be reported, including mean values and the calculated standard deviation.
(B) Full details of the sample and specimen preparation are to be provided including (where applicable):
(a) Catalyst/accelerator or curing agent types and mix ratio.
(b) Weights of resins, and/or reinforcements used.
(c) Casting/laminate dimensions.
(d) Number of layers of reinforcement used.
(e) Curing/post-curing conditions.

2. Thermosetting resins

(1) Cast samples are to be prepared in accordance with the manufacturer's recommendations and are to be cured and post-cured in a manner consistent with the intended use. Where postcure con-

ditions equivalent to ambient-cure conditions apply, see **1** (2) (B) and (C).

(2) The curing system used and the ratio of curing agent (or catalyst) to resin are to be recorded.

(3) The following are to be determined using these samples:
  (A) Tensile strength (stress at maximum load) and stress at break.
  (B) Tensile strain at maximum load.
  (C) Tensile secant modulus at 0.5 per cent and 0.25 per cent strain respectively.
  (D) Temperature of deflection under load.
  (E) Barcol hardness.
  (F) water absorption.
  (G) Volume shrinkage after cure.
  (H) Specific gravity of cast resin.

(4) For gel coat resins the stress at break and modulus of elasticity in flexure are to be determined.

(5) Test methods and acceptance criteria for cast thermosetting resins are to comply with **Table 3.28.2.**

Table 3.28.2 Tests on cast thermosetting resin specimens

Test	Standard	Acceptance criteria
Tensile properties	• KS M ISO 527-2 (Test speed = 5 mm/min, Specimen 1A or 1B)	To comply with the requirements of **Pt 2, Annex 2-8** of the Guidance relating to the Rules for Classification of steel Ships.
Flexural properties	• KS M ISO 178 (Test speed = Thickness/2 mm/min)	
Water absorption	• KS M ISO 62 (Method 1)	
Temperature of deflection under load	• KS M ISO 75-2 (Method A)	
Compressive properties	• KS M ISO 604 (Test speed : as for ductile materials)	
Interlaminar shear strength test(4)	• KS M ISO 14130 : Fibre-reinforced plastic composites - Determination of apparent interlaminar shear strength by short-beam method	

Notes :
(1) KS M ISO 62 : where resins are intended for use under ambient conditions to avoid additional post-curing, the requirement in ISO 62 for pre-drying the test specimen at 50 °C is to be omitted. The test result is to be expressed as mg of water.
(2) KS M ISO 527-2 : tensile properties are to be measured using extensometry.
(3) Testing method other than those given in this Table is to be in accordance with the requirements as deemed appropriate by the Society.
(4) Interlaminar shear strength test is to be applied to the polyester containing wax or other material that deteriorate bonding.

3. Reinforcements

(1) Tests of the mechanical properties are to be made on laminate samples containing the reinforcement and prepared as follows:
  (A) an approved resin of suitable type is to be used;
  (B) a minimum of three layers of the reinforcement is to be laid with parallel ply to give a laminate not less than 4 mm thick;
  (C) the weights of resin and reinforcement used are to be recorded together with the measured thickness of the laminate, including the measured weight per unit area of the reinforcement used;
  (D) for glass reinforcements, the glass/resin ratios, by weight, as shown in **Table 3.28.3** are to be used;

Table 3.28.3 Glass fraction by weight for different reinforcement types

Reinforcement type	Glass fraction (nominal values)
Unidirectional	0.60
Chopped strand mat	0.30
Woven roving	0.50
Woven cloth	0.50
Composite roving(1)	0.45
±45°/Triaxial/Quadriaxial parallel(2D) plied roving	0.50
Note: (1) Continuous fibre reinforcement with attached chopped strand mat.	

(E) for reinforcement type other than glass, a fibre volume fraction, as shown in **Table 3.28.4**, is to be used.

Table 3.28.4 Fibre fraction by volume for different reinforcement types

Reinforcement type	Fibre fraction by volume (nominal values)
Unidirectional	0.41
Chopped strand mat	0.17
Woven roving	0.32
Woven cloth	0.32
Composite roving	0.28
±45°/Triaxial/Quadriaxial parallel(2D) plied roving	0.32

Note : The volume content may be converted to weight fractions by use of the formula:

$$W_F = V_F D_F / (D_F V_F + D_R V_R)$$

where

W_F : fibre fraction by weight, D_F : density of fibre

D_R : density of cured resin, V_F : fibre fraction by volume

V_R : resin fraction by volume

(2) Rovings intended for filament winding are to be tested as unidirectional rovings.

(3) The laminate is to be tested in air in the directions indicated by **Table 3.28.5.**

Table 3.28.5 Fibre orientations in reinforced test specimens

Type of reinforcement	Test orientations
Unidirectional	0°
Chopped strand mat, Gun roving	any direction
Woven roving, Woven cloth. Composite roving	0° and 90°
±45° parallel plied roving	0°, 45°, 90° and -45°
Triaxial plied roving	
Quadriaxial plied roving	

(4) The following tests are to be made on the samples:
(A) Tensile strength (stress at maximum load).
(B) Tensile strain at break.
(C) Tensile secant modulus at 0.5 per cent and 0.25 per cent strain respectively.
(D) Compressive strength (stress at maximum load).
(E) Compressive modulus.
(F) Flexural strength (stress at maximum load).
(G) Modulus of elasticity in flexure.
(H) Apparent interlaminar shear.
(I) Fibre content.
(J) water absorption.

(5) Additionally, tests in (4) (c) and (f) are to be repeated, in one direction only, after immersion in fresh water at 35 °C for 28 days with the exception of 2.4.4(k).

(6) The test methods and acceptance criteria applied to laminate specimens of reinforcement are to comply with **Table 3.28.6.**

Table 3.28.6 Test methods and acceptance criteria of reinforcement specimens

Test	Standard	Acceptance criteria
Tensile properties Flexural properties Compressive properties Interlaminar shear Water absorption Glass content	• KS M ISO 527-4 (Test speed = 2 mm/min, Specimens Types II or III) • KS M ISO 14125 (Test speed = Thickness/2 mm/min, Method A) • KS M ISO 604 (Test speed : 1 mm/min) • KS M ISO 14130 • KS M ISO 62 (Method 1) • KS M ISO 1172	To comply with the requirements of **Pt 2, Annex 2-8** of the Guidance relating to the Rules for Classification of steel Ships.

Notes :
(1) KS M ISO 62 : where resins are intended for use under ambient conditions to avoid additional post-curing, the requirement in ISO 62 for pre-drying the test specimen at 50 °C is to be omitted. The test result is to be expressed as mg of water.
(2) KS M ISO 527-4 : tensile properties are to be measured using extensometry.
(3) Tensile modulus values are to be determined using an extensometer which may be removed for strain to failure.
(4) Testing method other than those given in this Table is to be in accordance with the requirements as deemed appropriate by the Society.

4. Core materials

(1) Initially the core shear strength and modulus are to be determined by ISO 1922-981 or ASTM C273. Test sandwich panels are then to be prepared and subjected to four-point flexural tests to determine the apparent shear properties according to ASTM C393 (short beam) at two representative thicknesses (i.e. 15 mm and 30 mm). Testing is to be carried out at ambient temperature and at 70 °C. The following requirements are to be observed:
(A) Each skin is to be identical and have a thickness not greater than 21 per cent of the nominal core thickness. For hand laid constructions, each skin is to comprise a lightweight chopped strand mat reinforcement (300 g/m^2) consolidated at a glass content, by weight, of 0,3 against the core, plus the required number of woven reinforcements consolidated, using an isophthalic polyester resin, to give a minimum glass content, by weight, of 0,5.
(B) The method of construction of the sandwich laminate is to reflect the core material manufacturer' instructions for use, i.e. application of bonding paste, surface primer or any other recommended system.
(C) Curing conditions are to be in accordance with **1** (2), (B) and (C).
(D) The dimensions of the test samples should be based on the requirements of ASTM C393 Paragraph 5.1, and the ratio parameters as indicated in ASTM C393 Paragraph 5.2, using a proportional limit stress (F) for the woven roving skins of 130 N/mm^2 and a span (a2) of not less than 400 mm.

(2) For each type of test sample the following data are to be reported, together with the submission of a representative test sample showing the mode of failure for each density of core material:
(A) Skin and core thickness, and core type and density.
(B) Resin/catalyst/accelerator ratio.
(C) Skin construction, including types and weight of reinforcements, resin(s), etc.
(D) Details of production method and curing conditions (temperature and times).
(E) Where additional preparation of the foam is involved, for example the use of primers or bonding pastes, full details are to be provided.
(F) Actual span between base supports for each type of test sample.

(3) **Specific requirements for end-grain balsa**
(A) The following tests are to be carried out on the virgin material, both parallel to and perpendicular to the grain. The density of the virgin material is also to be tested.
(a) Compressive strength (stress at maximum load).
(b) Compressive modulus of elasticity.
(c) Tensile strength (stress at maximum load).
(B) Where the balsa is mounted on a carrier material (e.g. scrim), any adhesive used is to be of a type compatible with the proposed resin system.
(C) The test methods and acceptance criteria for end-grain balsa are to comply with **Table 3.28.7.**

Table 3.28.7 Test methods and acceptance criteria of end-grain balsa

Test	Standard	Acceptance criteria
Density Tensile properties Compressive properties Shear properties	• KS M ISO 845 • ASTM C297-61 (Test speed=Thickness/10 mm/min) • KS M ISO 844 (Test speed=Thickness/10 mm/min) • ISO 1922 (Test speed=Thickness/1 mm/min)	To comply with the requirements of **Pt 2, Annex 2-8** of the Guidance relating to the Rules for Classification of steel Ships.

(4) **Specific requirements for rigid foams (PVC, Polyurethane and other types)**
(A) The following test are to be carried out for each type of foam:
(a) Density.
(b) Tensile strength (stress at maximum load).
(c) Tensile modulus of elasticity.
(d) Compressive strength (stress at maximum load).
(e) Compressive modulus of elasticity.
(B) Additionally the compressive properties (see (A), (d) and (e)) are to be determined at a minimum of five points over the temperature range ambient to maximum recommended service or 70 °C, whichever is the greater.
(C) The test methods and acceptance criteria for rigid foams are to comply with **Table 3.28.7.**

2804. The test for each FRP ship is to be conducted in accordance with the requirements in **Ch 3, Sec 3** of Rules for Classification of FRP Ships.

Section 29 Water Level Detection and Alarm System

2901. Application

The requirements in this Section apply to tests and inspections for the type approval of water level detector and visual and audible alarm system (hereinafter called detector system) in accordance with the requirements of **Pt 7 Ch 3, 1403. 1.** and **3.** of the Rules and **Pt 7 Annex 7-6 I.** of the Guidance

2902. Data to be submitted

The following reference data are to be submitted to the Society in addition to those specified in **102.**

(1) Specifications of the detector system including any limitation regarding the type of cargoes for the guarantee of performance

(2) Construction drawings and explanatory documents of the working principle of the detector system

(3) Technical documents of the detector system including the manual specified in **Pt 7 Annex 7-6 I. 8.** of the Guidance

2903. Construction and Function

The construction and the function of the detector system is to satisfy the following requirements.

(1) To be able to adequately withstand ship vibration, ship motions, trim and heel.

(2) To be able to withstand the most severe pressure and temperature expected during working conditions and, for parts in contact with the liquid, to have adequate compatibility between the device and the liquid considered.

(3) The construction in addition to the above is also to be as follows:

(a) To be such that maintenance and inspection can be carried out easily and safely

(b) To have appropriate devices installed to prevent metal fittings from coming loose.

(4) The construction and function specified in **Pt 7 Annex 7-6 I. 4.** through **6.** of the Guidance are to be provided.

(5) For the systems provided with override devices, the function specified in **Pt 7 Annex 7-6 I. 6.** (5) of the Guidance is to be provided.

2904. Type test

1. The approval test is to include the following items (1) through (5) depending on the application and the type of the detector system.

(1) In addition to conformity with the requirements in **2903**, confirmation of whether the test sample complies with the designated specifications for finishing, construction, dimensions and parts or not

(2) Pressure test of the test specimen for a period in accordance with the following (a) through (c). The test pressure is to be a design pressure but not less than the pressure equivalent to seawater head of maximum depth of the space where the parts are fitted.

(a) The submerged test period for electrical components intended to be installed in ballast tanks and cargo tanks used as ballast tanks is to be not less than 20 days.

(b) The submerged test period for electrical components intended to installed dry spaces and cargo holds not intended to be used as ballast tanks is to be not less than 24 hours.

(c) Where a detector and/or cable connecting device (e.g. junction box, etc) is installed in a space adjacent to a cargo hold (e.g. lower stool, etc.) and the space is considered to be flooded under damage stability calculations, the detectors and equipment are to satisfy the requirements of IP68 for a water head equal to the hold depth for a period of 20 days or 24 hours on the basis of whether or not the cargo hold is intended to be used as a ballast tank as described in (a) and (b) above.

(3) Confirmation whether the test sample performs as specified or not, under the regular installed condition, inclining conditions of 22.5 degrees in transverse direction and 10 degrees in longitudinal direction at the following temperature:

(a) Parts installed outside the cargo hold: normal temperature

(b) Parts installed inside the cargo hold: maximum and minimum working temperature (Where

this temperature is expected within the range between 0℃ and 60℃, room temperature may be used)

(4) For the detector system installed in cargo holds, confirmation whether the test specimen detects seawater as specified or not, by merging in a test mixture of fine materials of each intended cargoes in seawater (a solution of sodium chloride having a specific gravity of 1.025 g/cm^3 may be accepted as an alternative to seawater) in accordance with the followings:

(a) the test container for the cargo/water mixture is to be dimensioned so that its height and volume are such that the sensor and any filtration fitted can be totally submerged for the repeated functionality tests.

(b) the sensor and any filtration fitted that are to be arranged in the container as they would be installed in accordance with the installation instructions submitted.

(c) The pressure in the test mixture container is to be not more than 0.02 MPa at the sensor and any filter arrangement. The pressure may be realised by pressurisation or by using a container of sufficient height.

(d) When the test mixture is pumped into the test mixture container, the test mixture is to be kept in homogenized condition during the test and the effect of the pumping is not to affect the operation of the sensor and filter arrangements.

(e) The concentration of fine materials in a test mixture is to be of minimum 50 % by weight. In general, the type of test mixture may be limited to the followings. The smallest and largest particle size together with the density of the dry mixture used in this test is to be ascertained and recorded in the test records and the manuals required by **Pt 7, Annex 7-6 I. 8.** of the Guidance

(i) Minimum one type of fine mineral (dust of iron ore, coal, sand, etc. with particle size of, in general, less than 0.1 mm)

(ii) Minimum one type of grain (barleycorn, wheat, corn, etc. with particle size of, in general, greater than 3 mm)

(f) The cargo/water mixture is to be pumped into the test container to a predetermined level that submerges the detector and the operation of the alarm observed.

(g) The test container is then to be drained and the de-activation of the alarm condition observed.

(h) The test container and sensor with any filter arrangement are to be allowed to dry without physical intervention.

(i) A sequence from immersion to detection is to be repeated minimum 10 times (a period of one sequence of the test is not to be less than 30 seconds as a standard) without cleaning any filtration arrangements.

(j) Satisfactory alarm activation and de-activation at each of the ten consecutive tests will demonstrate satisfactory type testing.

(5) For the electrical parts of the devices, testing as given in the following (a) through (j). However the type tests are to comply with the requirements in **2304. 2** and, in case the explosion-protected construction is required, type tests also are to comply with the requirements in **Pt 6, Ch 1, 201. 1.,** (2) of the Guidance.

(a) electrical power supply failure test

(b) power supply variation test

(c) dry heat test

(d) damp heat test

(e) cold test (for water ingress detectors)

(f) vibration test.

(g) insulation resistance test

(h) high voltage test

(i) inclinations tests(if the detectors contain moving parts).

(j) EMC tests(if the detector is capable of producing electromagnetic noise)

2. Additional tests other than those of the preceding **1.** may be requested, where deemed necessary by the Society.

Section 30 Protective Coating Systems for Ballast Tanks

3001. Application

1. The requirements of this Section apply to tests and inspection for the type approval of protective coating systems in accordance with the requirements in **Pt 3, Ch 1, 801.** of the Guidance.

2. Winter and summer type coating are considered different unless infrared (IR) identification and specific gravity (SG) demonstrates that they are the same. Winter type epoxy is required separate prequalification test including shop primer compatibility test according to **3006.**

3002. Data to be submitted

1. The following approval data are to be submitted to the Society in addition to those specified in **102.**

(1) Copy of Technical Data Sheet, including : 3 copies
  (a) product name and identification mark and/or number;
  (b) materials, components and composition of the coating system, colours;
  (c) minimum and maximum dry film thickness;
  (d) application methods, tools and/or machines;
  (e) condition of surface to be coated (de-rusting grade, cleanness, profile, etc.); and
  (f) environmental limitations (temperature and humidity);
  (g) dry-to recoat times and walk-on time

(2) Compatibility of shop primer with protective coating system : 3 copies(if any)

(3) Inspection and acceptance criteria of protective coating system : 3 copies

(4) Procedures for repair of protective coating system : 3 copies

2. The coating manufacturer should provide to the Society the following information;

(1) A detailed list of the production facilities.
(2) Names and location of raw material suppliers will be clearly stated.
(3) A detailed list of the test standards and equipment to be used, (Scope of approval).
(4) Details of quality control procedures employed.
(5) Details of any sub-contracting agreements.
(6) List of quality manuals, test procedures and instructions, records, etc.
(7) Copy of any relevant certificates with their issue number and/or date e.g. Quality Management System certification.

3003. Data review and plant audit

1. The Society shall performed the data review and plant audit specified in **Pt. 1, Annex 1-11, 2.** and **3.** of the Guidance Relating to the Rules for the Classification of Steel Ships to assure the manufacturing process (including that of subcontractor's works) and quality assurance of the protective coating systems.

2. With the exception of early ‘scale up’ from lab to full production, adjustment outside the limitations listed in the QC instruction referred to below is not acceptable, unless justified by trials during the coating system’s development programme, or subsequent testing. Any such adjustments must be agreed by the formulating technical centre.

3. If formulation adjustment is envisaged during the production process the maximum allowable limits will be approved by the formulating technical centre and clearly stated in the QC working procedures.

4. The manufacturer’s quality control system will ensure that all current production is the same formulation as that supplied for the Type Approval Certificate. Formulation change is not permissible without testing in accordance with the test procedures in **3004. 3.** or **4.** and the issue of a Type Approval Certificate by the Society.

5. Batch records including all QC test results such as viscosity, specific gravity and airless spray characteristics will be accurately recorded. Details of any additions will also be included.

6. Whenever possible, raw material supply and lot details for each coating batch will be traceable. Exceptions may be where bulk supply such as solvents and pre-dissolved solid epoxies are stored in tanks, in which case it may only be possible to record the supplier's blend.

7. Dates, batch numbers and quantities supplied to each coating contract will be clearly recorded.

8. All raw material supply must be accompanied the supplier's 'Certificate of Conformance'. The certificate will include all requirements listed in the coating manufacturer's QC system.

9. In the absence of a raw material supplier's certificate of conformance, the coating manufacturer must verify conformance to all requirements listed in the coating manufacturer's QC system.

10. Drums must be clearly marked with the details as described on the 'Type Approval Certificate'.

11. Product Technical Data Sheets must comply with all the PSPC requirements. The QC system will ensure that all Product Technical Data Sheets are current.

12. QC procedures of the originating technical centre will verify that all production units comply with the above stipulations and that all raw material supply is approved by the technical centre.

3004. Performance standard

1. Protective coating systems are, in principal, to be an epoxy-based systems. All systems that are not an epoxy-based system applied according to this requirements are defined as an alternative system.

2. A multi-coat system with each coat of contrasting colour is recommended. The top coat shall be of a light colour(a colour that reflects light to an extent that a simple flash light (hand torch) will make inspection easy and fast. Normally light grey, buff, off-white, swimming pool blue/green, etc. easily distinguishable from rust.) in order to facilitate in-service inspection.

3. Protective coatings for dedicated seawater ballast tanks shall satisfied the approval tests specified in **3006. 2.** and **3.** and protective coatings for double-side spaces of bulk carriers shall satisfied the approval test specified in **3006. 3.**

4. Epoxy-based systems which have documented field exposure for 5 years with a final coating condition of not less than "GOOD" may be accepted. In this case, field exposure for 5 years shall be satisfied following conditions.

(1) Coating manufacturer's records, which shall at least include the information indicated in followings, shall be examined to confirm coating system has 5 years field exposure, and the current product is the same as that being assessed.
- (a) Original application records
- (b) Original coating specification
- (c) Original technical data sheet,
- (d) Current formulation's unique identification (Code or number)
- (e) If the mixing ratio of base and curing agent has changed, a statement from the manufacturer confirming that the composition mixed product is the same as the original composition. This shall be accompanied by an explanation of the modifications made.
- (f) Current technical data sheet for the current production site
- (g) SG and IR identification of original product
- (h) SG and IR identification of the current product
- (i) If original SG and IR cannot be provided then a statement from the manufacturer confirming the readings for the current product are the same as those of the original.

(2) A joint (coating manufacturer/Society) survey of all ballast tanks of a selected vessel is to be carried out for the purpose of verification of compliance with the requirements of (1) and (5). The coating manufacturer's representative is to be qualified to *NACE Coating Inspector Level 2* or *FROSIO Inspector Level III* or equivalent as verified by the Administration.

(3) The selected vessel is to have ballast tanks in regular use, of which:
- (a) At least one tank approx 2,000 ㎥
- (b) At least one tank shall be adjacent to heated tank and
- (c) At least one tank underdeck exposed to sun.

(4) In the case that the selected vessel does not meet the requirements in (3) above then the limitations shall be clearly stated on the type approval certificate. For example, the coating cannot be used in tanks adjacent to heated tanks or underdeck or tanks with volume greater than the

size surveyed.

(5) All ballast tanks shall be in "GOOD" condition excluding mechanical damages, without touch up or repair in the prior 5 years. “Good” is defined as: Condition with spot rusting on less than 3% of the area under consideration without visible failure of the coating. Rusting at edges or welds, must be on less than 20 % of edges or welds in the area under consideration. Examples of how to report coating conditions with respect to areas under consideration should be as those given in **IACS Recommendation 87, Appendix 1.**

5. In the case that a manufacturer wishes to have products which are manufactured in different locations under the same name, then infrared (IR) identification and specific gravity shall be used to demonstrate that they are the same coating, or individual approval tests will be required for the paint manufactured in each location.

3005. Test Laboratory

The test laboratory where testing is carried out in accordance with the requirements in **3004. 3.** are to equip the test facilities so that they can perform the testing in accordance with the requirements in this Instruction and are to be data reviewed and audited in accordance with the requirements in **Pt 1, Annex 1-11, 2.**(except for (3) (A) (b)) and **3.** of the Guidance Relating to the Rules for the Classification of Steel Ships by the Society.

3006. Type test

1. Application of protective coating system

(1) There shall be a minimum of two stripe coats and two spray coats, except that the second stripe coat, by way of welded seams only, may be reduced in scope where it is proven that the NDFT can be met by the coats applied, in order to avoid unnecessary over-thickness.

(2) Stripe coats shall be applied by brush or roller.

(3) Each main coating layer shall be appropriately cured before application of the next coat, in accordance with coating manufacturer’s recommendations.

(4) Surface contaminants such as rust, grease, dust, salt, oil, etc., shall be removed prior to painting with proper method according to the paint manufacturer’s recommendation. Abrasive inclusions embedded in the coating shall be removed. Job specifications shall include the dry-to-recoat times and walk-on time given by the manufacturer.

(5) NDFT 320 ㎛ with 90/10 rule(A 90/10 rule means that 90 % of all thickness measurements shall be greater than, or equal to, NDFT and none of the remaining 10 % measurements shall be below 0.9 x NDFT) for epoxy-based coatings; other systems to coating manufacturer’s specifications.

(6) For the coating pre-qualification test, the measured average DFT(dry film thickness) on each prepared test panels shall not exceed NDFT(nominal dry film thickness) of 320 ㎛ plus 20 % unless a paint manufacturer specified a NDFT greater than 320 ㎛.

(7) In the case that a paint manufacturer specified a NDFT greater than 320 ㎛, the average DFT shall not exceed the specified NDFT plus 20 % and the coating system shall be certified to the specified NDFT if the system passes the tests according to 3004. 3.. The measured DFT shall meet the "90/10" rule and the maximum DFT shall be below the maximum DFT value specified by the manufacturer.

(8) Care shall be taken to avoid increasing the thickness in an exaggerated way. Wet film thickness shall be regularly checked during application.

(9) Thinner shall be limited to those types and quantities recommended by the manufacturer.

2. Test on Simulated Ballast Tank Conditions

(1) **Test condition**

Test on simulated ballast tank conditions shall satisfy each of the following conditions:

(a) The test shall be carried out for 180 days.

(b) There are to be 5 test panels.

(c) The size of each test panel is 200 mm x 400 mm x 3 mm. Two of the panels (Panel 3 and 4 below) have a U-bar welded. The U-bar is welded to the panel in a 120 mm distance from one of the short sides and 80 mm from each of the long sides. (see **Fig 3.30.1**)

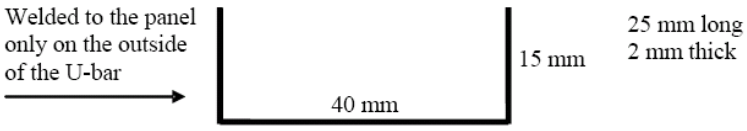

Fig 3.30.1 Welding of U-bar

(d) Coating systems are to be applied on test panels according to **6.1.** Shop primer(zinc containing inhibitor free zinc silicate based or equivalent) to be weathered for at least 2 months and cleaned by low pressure washing or other mild method. Blast sweep or high pressure washing, or other primer removal methods not to be used. Weathering method and extent shall take into consideration that the primer is to be the foundation for a 15 year target useful life system. To facilitate innovation, alternative preparation, coating systems and dry film thicknesses may be used when clearly defined.

(e) The reverse side of the test piece shall be painted appropriately, in order not to affect the test results.

(f) As simulating the condition of actual ballast tank, the test cycle runs for two weeks with natural or artificial seawater and one week empty. The temperature of the seawater is to be kept at about 35°C.(see **Fig 3.30.2**)

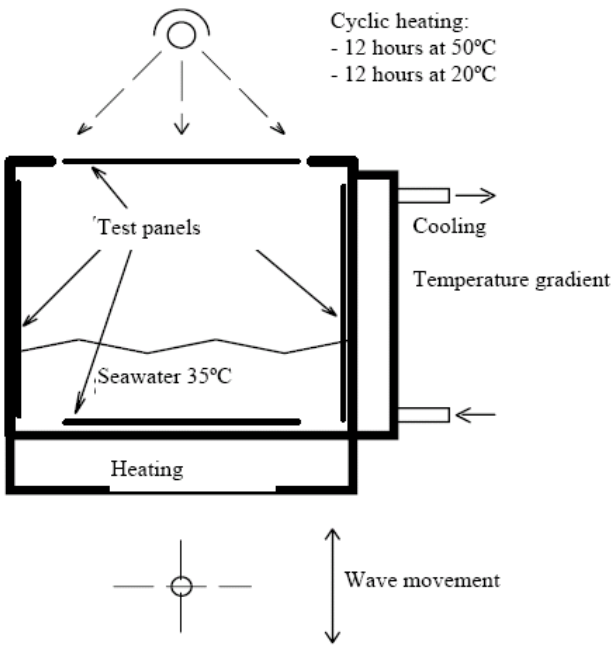

Fig 3.30.2 Wave tank for testing of ballast tank coatings

(g) **Test panel 1**: This panel is to be heated for 12 h at 50 °C and cooled for 12 h at 20 °C in order to simulate upper deck condition. The test panel is cyclically splashed with natural or artificial seawater in order to simulate a ship's pitching and rolling motion. The interval of splashing is 3 s or faster. The panel has a scribe line down to bare steel across width.

(h) **Test panel 2**: This panel has a fixed sacrificial zinc anode in order to evaluate the effect of cathodic protection. A circular 8 mm artificial holiday down to bare steel is introduced on the test panel 100 mm from the anode in order to evaluate the effect of the cathodic protection. The test panel is cyclically immersed with natural or artificial seawater.

(i) **Test panel 3**: This panel is to be cooled on the reverse side, in order to give a temperature gradient to simulate a cooled bulkhead in a ballast wing tank, and splashed with natural or artificial seawater in order to simulate a ship's pitching and rolling motion. The gradient of temperature is approximately 20 °C, and the interval of splashing is 3 s or faster. The panel has a scribe line down to bare steel across width.

(j) **Test panel 4**: This panel is to be cyclically splashed with natural or artificial seawater in order to simulate a ship's pitching and rolling motion. The interval of splashing is 3 s or faster. The panel has a scribe line down to bare steel across width.

(k) **Test panel 5**: This panel is to be exposed to dry heat for 180 days at 70 °C to simulate boundary plating between heated bunker tank and ballast tank in double bottom.

(2) **Test results**

(A) Prior to the testing, the following measured data of the coating system shall be reported:

(a) Infrared (IR) identification of the base and hardener components of the coating;

(b) Specific gravity of the base and hardener components of the paint(refer to *KS M ISO* 2811-1/4); and

(c) Number of pinholes, low voltage detector at 90 V.

(B) After the testing, the following measured data shall be reported:

(a) blisters and rust (refer to *KS M ISO* 4628-2 and *KS M ISO* 4628-3);

(b) dry film thickness (DFT) (use of a template)(9 equally distributed measuring points are used on panel's size 150 mm x 150 mm or 15 equally distributed measuring points on panel's size 200 mm x 400 mm.);

(c) adhesion value(refer to *KS M ISO* 4624);

(d) flexibility modified according to panel thickness (refer to *ASTM D*4145, 3 mm steel, 300 μm coating, 150 mm cylindrical mandrel gives 2 % elongation) for information only;

(e) cathodic protection weight loss/current demand/disbondment from artificial holiday; and

(f) undercutting from scribe. The undercutting along both sides of the scribe is measured and the maximum undercutting determined on each panel. The average of the three maximum records is used for the acceptance.

(3) **Acceptance criteria**

(a) The test results based on (2) shall satisfy the criteria specified in **Table 3.30.1.**

Table 3.30.1. Acceptance criteria for the test on Simulated Ballast Tank Conditions

Item	Acceptance criteria for epoxy-based systems	Acceptance criteria for alternative systems
Blisters on panel	No blisters	No blisters
Rust on panel	Ri 0 (0%)	Ri 0 (0%)
Number of pinholes	0	0
Adhesive failure	> 3.5 MPa Adhesive failure between substrate and coating or between coats for 60% or more of the areas.	> 5 MPa Adhesive failure between substrate and coating or between coats for 60% or more of the areas.
Cohesive failure	> 3 MPa Cohesive failure in coating for 40% or more of the area.	> 5 MPa Cohesive failure in coating for 40% or more of the area.
Cathodic protection; current demand calculated from weight loss	< 5 mA/m^2	< 5 mA/m^2
Cathodic protection; disbondment from artificial holiday	< 8 mm	< 5 mm
Undercutting from scribe	< 8 mm	< 5 mm
U-bar	Any defects, cracking or detachment at the angle or weld will lead to system being failed.	Any defects, cracking or detachment at the angle or weld will lead to system being failed.

(b) Epoxy-based systems shall satisfy the criteria for epoxy-based systems and alternative systems shall satisfy the criteria for alternative systems as indicated in **Table 3.30.1.**

(4) **Test report**

The test report shall include the following information:

(A) name of the manufacturer;
(B) date of tests;
(C) product name/identification of both paint and primer;
(D) batch number;
(E) data of surface preparation on steel panels, including the following:
  (a) surface treatment;
  (b) water soluble salts limit;
  (c) dust; and
  (d) abrasive inclusions;
(F) application data of coating system, including the following:
  (a) shop primed;
  (b) number of coats;
  (c) recoat interval(both of actual specimen data and manufacturer's requirement/recommendation.)
  (d) dry film thickness (DFT) prior to testing(both of actual specimen data and manufacturer's requirement/recommendation);
  (e) thinner;(both of actual specimen data and manufacturer's requirement/recommendation);
  (f) humidity(both of actual specimen data and manufacturer's requirement/recommendation);
  (g) air temperature(both of actual specimen data and manufacturer's requirement/ recommendation);
  (h) steel temperature;
(G) test results according to (2); and
(H) judgment according to (3)

3. Condensation Chamber Test

(1) **Test condition** Condensation chamber test shall be conducted in accordance with the *KS M ISO* 6270-1 and shall satisfy each of the following conditions (see **Fig 3.30.3**):

(a) The exposure time is 180 days.
(b) There are to be 2 test panels.
(c) The size of each test panel is 150 mm x 150 mm x 3 mm.
(d) Coating system are to be applied on test panels according to 6.1 of this Instruction. Shop primer to be weathered for at least 2 months and cleaned by low pressure washing or other mild method. Blast sweep or high pressure washing, or other primer removal methods not to be used. Weathering method and extent shall take into consideration that the primer is to be the foundation for a 15 year target life system. To facilitate innovation, alternative preparation, coating systems and dry film thicknesses may be used when clearly defined.
(e) The reverse side of the test piece shall be painted appropriately, in order not to affect the test results.

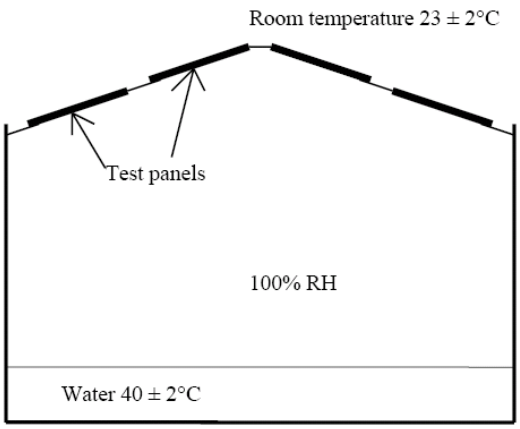

Fig 3.30.3 Condensation chamber

(2) **Test results** According to **2.** (2), (A) and (B) (except for 2. (2) (B), (e) and (f))
(3) **Acceptance criteria**
(A) The test results based on (2) shall satisfy the criteria specified in **Table 3.30.2.**

Table 3.30.2. Acceptance criteria for the Condensation Chamber Test

Item	Acceptance criteria for epoxy-based systems	Acceptance criteria for alternative systems
Blisters on panel	No blisters	No blisters
Rust on panel	Ri 0 (0%)	Ri 0 (0%)
Number of pinholes	0	0
Adhesive failure	> 3.5 MPa Adhesive failure between substrate and coating or between coats for 60% or more of the areas.	> 5 MPa Adhesive failure between substrate and coating or between coats for 60% or more of the areas.
Cohesive failure	> 3 MPa Cohesive failure in coating for 40% or more of the area.	> 5 MPa Cohesive failure in coating for 40% or more of the area.

(B) Epoxy-based systems shall satisfy the criteria for epoxy-based systems and alternative systems shall satisfy the criteria for alternative systems as indicated in **Table 3.30.2**.
(4) **Test report** According to **2.** (4)

4. Equivalent laboratory test

Type approval of a coating system is normally to be carried out in accordance with 2 and/or 3 above. However, the Society may accept an equivalent laboratory test method comprised of a single test or number of tests combined as a test procedure, subject to the following acceptance requirements:

(1) The test method/programme shall be based on recognized national or international standards, well established with proven experience.
(2) The equivalent test program is to adequately address the technical intent of the tests required in **2** and/or **3** above.
(3) Test results of samples tested in accordance with the equivalent test methods are, wherever possible, to be compared against the acceptance criteria specified in **2** and/or **3** above. Where this is not possible due to the parameters of the equivalent test method used, the acceptance criteria of the equivalent test method standard are to be selected that provide the closest equivalent to those in **2** and/or **3** above.
(4) Test laboratories shall comply with **3005.**
(5) Epoxy based coating systems approved by such an equivalent test method shall be applied in the shipyard in accordance with all the surface preparation and application requirements specified in 1 above.

3007. Type Approval Certificates

1. If the type tests specified in **3004. 3** or 5 years field exposure test specified in **3004. 4** are satisfactory, a Type Approval Certificate will be issued to include both the epoxy and the shop primer.

2. In case where 5 years field exposure test specified in **3004. 4** are performed, The Type Approval Certificate shall reference the joint survey report specified in **3004. 4.** (2)

3. In case where 5 years field exposure test specified in 3004. 4 are performed, If the applied NDFT is greater than required in **3006. 1.** (5), the applied NDFT will be the minimum to be applied during construction. This will be reported prominently on the Type Approval Certificate.

4. In case where the epoxy has been tested without shop primer on bare prepared steel with satisfactory, a Type Approval Certificate will be issued. The Type Approval Certificate will just record the epoxy.

5. The Type Approval Certificate is invalid if the formulation of either the epoxy or the shop primer is changed. It is the responsibility of the manufacturer to inform class immediately of any changes to the formulation.

3008. Compatability of shop primer

1. If a zinc silicate shop primer has passed the type test as part of an epoxy coating system, it may be used in combination with other approved epoxy coatings provided that the compatibility has been confirmed by the test in accordance with **3006. 2.** (1), (h) without wave movement.

2. In case where same epoxy coating system is to applied on the different shop primers, each combination to be type tested in accordance with **3004.**. However, if each shop primer have already passed the type test as part of an epoxy coating system, the compatibility of shop primer can be confirmed by the test in accordance with **1.** above.

3. If the test or tests specified above **1.** are satisfactory, a Type Approval Certificate will be issued. In this instance the Type Approval Certificate will include the details of the epoxy and a list of all shop primers with which it has been tested that have passed these requirements.

3009. Dealing after approval

1. The protective coating systems satisfied for the tests specified in **3004. 3.** are to be allowed the use of the epoxy with all the named shop primers or on bare prepared steel.

2. The protective coating systems satisfied for the tests without shop primer according to **3007. 4.** are to be allowed the use of the epoxy on bare prepared steel only.

3. In all cases of approval by 5 years field exposure test specified in **3004. 4.**, the shop primer shall be removed prior to application of the approved epoxy based system coating, unless it can be confirmed that the shop primer applied during construction, is identical in formulation to that applied in the selected vessel used as a basis of the approval.

3010. Alternative systems

1. All systems that are not applied according to **IMO PSPC(IMO Resolution 215(82))** **4.4** are defined as an alternative system.

2. Acceptance of alternative systems will be subject to documented evidence that they ensure a corrosion prevention performance at least equivalent to that indicated in **IMO PSPC(IMO Resolution 215(82)).**

3. The documented evidence shall consist of satisfactory performance corresponding to a target useful life of 15 years in either actual field exposure for 5 years with final coating condition not less than "GOOD" or laboratory testing according to **3004. 3**.

Section 31 LED lighting fittings

3101. Application and general

LED lighting fittings installed in navigation bridge are to comply with the requirements of **Pt 6, Ch 1, Sec 10** and **IEC 60092-306** as well as this guidance.

3102. Data to be submitted

The manufacturer wishing to obtain the type approval of LED lighting fittings is to submit the data required in **Ch 3, Sec 3, 102. 3** to the Society.

3103. Type test

Type tests are to be carried out in accordance with **Table 3.31.1** and supplementary tests may be required where deemed necessary by the Society. Type tests may be partly or wholly omitted, subject to the approval by the Society, in cases where the manufacturer submits the test reports issued by an authorized test laboratory in accordance with the standard approved by the Society.

Table 3.31.1 Type test items

No.	Item	Test method		Remark
1	Visual inspection	No. 1	**Table 3.23.1** of **Ch 3, Sec 23**	-
2	Performance Test	No. 2		-
3	Electrical power supply failure test	No. 3		-
4	Electrical power supply variation test	No. 4		-
5	Dry heat test	No. 6		-
6	Damp heat test	No. 7		-
7	Vibration test	No. 8		-
8	Insulation resistance test	No. 10		-
9	High voltage test	No. 11		-
10	Cold test	No. 12		-
11	EMC tests	No. 14 ~ 21		-
12	Flame resistance test	No. 22		-
13	Salt mist test	No. 13		for LED lightings installed in open deck
14	Mechanical strength test	IEC 60092-306		-
15	Temperature rising test	IEC 60092-306		-
16	IP test	IEC 60529		Please refer to **Pt 6, Ch 1, Table 6.1.6** regarding the required IP grade
17	Explosion-Proof test	IEC 60079 Series		for LED lightings installed in hazardous areas

Section 32 Corrosion Resistant Steels

3201. Application

1. The requirements of this Section apply to tests and inspection for the type approval of Corrosion Resistant Steel in accordance with the requirements in **Pt 2, Ch 1, 301.** of the Rule.

2. Corrosion Resistant Steel is to be graded and approved its manufacturing process in accordance with **Ch 2, Sec 2-1** of this Guidance.

3. For each corrosion designation, Corrosion resistant steel shall be verified by the corrosion testing specified in this Sec..

4. The Surveyor is to be present, as a rule, when the test samples for the approval test are being identified and for approval tests.

3202. Data to be submitted

The following approval data are to be submitted to the Society in addition to those specified in **102.**

(1) Corrosion test plan and details of equipment and test environments. : 3 copies

(2) Technical data related to product assessment criteria for confirming corrosion resistance : 3 copies

(3) The technical background explaining how the variation in added and controlled elements improves corrosion resistance(The manufacturer will establish a relationship of all the chemical elements which affect the corrosion resistance, the chemical elements added or controlled to achieve this are to be specifically verified for acceptance. Verification is to be based on the ladle analysis of the steel.) : 3 copies

(4) The grades, the brand name and maximum thickness of corrosion resistant steel to be approved. Designations for corrosion resistant steels are given in **Table 3.32.1** : 3 copies

Table 3.32.1 Designations for Corrosion Resistant Steels

Type of steel	Location where steel is effective	Corrosion Resistant Designation
Rolled steel for hull	For strength deck, ullage space	RCU
	For inner bottom	RCB
	For both strength deck and inner bottom plating	RCW

(5) The welding processes and the brand name of the welding consumables to be used for approval. : 3 copies

3203. Data review and approval of test plan

1. The test program submitted by the manufacturer is to be reviewed by the Society, if found satisfactory, it will be approved and returned to the manufacturer for acceptance prior to tests being carried out. Tests that need to be witnessed by the Surveyor will be identified.

2. Method for selection of test samples is to satisfy the following:

(1) The numbers of test samples are to comply with **3205.**.

(2) The number of casts and test samples selected are to be sufficient to make it possible to confirm the validity of interaction effects and/or the control range (upper limit, lower limit) of the elements which are added or intentionally controlled, for improving the corrosion resistance. Where agreed, this may be supported with data submitted by the manufacturer.

3. In addition to **2.** (2) above, the Society may require additional tests in the following cases. Considerations for additional tests may include but not be limited to.:

(1) When the Society determines that the control range is set by the theoretical analysis of each element based on existing data, the number of corrosion resistance tests conducted in accordance with Appendix of MSC.289(87) is too few to adequately confirm the validity of the control

range of chemical composition;
(2) When the Society determines that the data of the corrosion resistance test result obtained for setting the control range of chemical composition varies too widely;
(3) When the Society determines that the validity of the corrosion resistance test result for setting the control range of chemical composition is insufficient, or has some flaws;
(4) When the Society's surveyor has not attended the corrosion resistance tests for setting the control range of chemical composition, and the Society determines that additional testing is necessary in order to confirm the validity of the test result data; and
(5) When the Society determines that it is necessary, for reasons other than cases (1) to (4) above.

Remarks:
The chemical composition of the corrosion resistant steel is to be within the range specified for rolled steel for hull. Elements to be added for improving the corrosion resistance and for which content is not specified are to be generally within 1% in total.

3204. Test Laboratory

1. The test laboratory where testing is carried out in accordance with the requirements in **3205.** are to equip the test facilities so that they can perform the testing in accordance with the requirements in this Appendix and are to be data reviewed and audited in accordance with the requirements in **Pt 1, Annex 1-11, 2.**(except for (3) (A) (b)) and 3. of the Guidance Relating to the Rules for the Classification of Steel Ships by the Society.

2. Where a Surveyor of the Society is present at specified stages to witness the approval tests. The Society's approval is not needed for the testing laboratory.

3205. Approval test

1. Test on simulated upper deck conditions

(1) **Test condition**
Tests on simulated upper deck conditions in cargo oil tank (COT) shall satisfy each of the following conditions:
(a) Corrosion resistant steel and conventional steel shall be tested at the same time.
(b) The chemical composition of conventional steel shall comply with the requirements of **Table 3.32.2**. The mechanical properties of the test specimen should be representative of steel used in its intended shipboard application.

Table 3.32.2 Chemical composition for conventional steel (%)

C	Mn	Si	P	S
0.13~0.17	1.00~1.20	0.15~0.35	0.010~0.020	0.002~0.008
Al(acid soluble, min.)	Nb, max.	V, max.	Ti, max.	Nb+V+Ti, max.
0.015	0.02	0.10	0.02	0.12
Cu, max.	Cr, max.	Ni, max.	Mo, max.	Other, max.
0.1	0.1	0.1	0.02	0.02 (each)
Notes; 1. To be based on ladle analysis given in the mill certificate. 2. Steel complying with a national standard that meets the requirements of this Table is also acceptable.				

(c) The tests for corrosion resistant steel shall be carried out for 21, 49, 77 and 98 days. The tests for conventional steel shall be carried out for 98 days. The tests for welded joints shall be carried out for 98 days.
(d) There are to be five test pieces for each test period.
(e) The size of each test piece is 25±1mm x 60±1mm x 5±0.5mm. The surface to be tested is to be taken from a position within 2 mm of one rolled surface. This surface is to be ground to bare steel and polished with an emery paper #600.

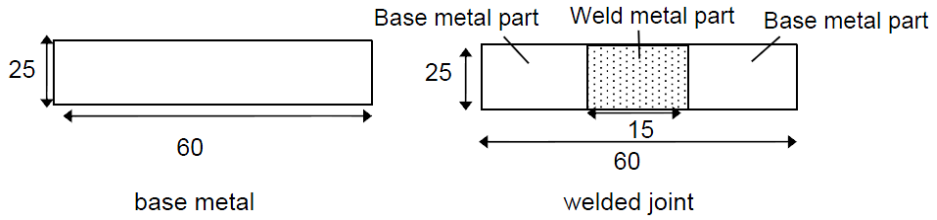

Fig 3.32.1 Test piece

(f) For welded samples, a test assembly is to be made from the same steel cast as the base material test in (e) but may be from a plate of different thickness. The assembly is to be welded using the process and consumable to be approved for use with the base material. The size of the test piece for a welded joint is 25±1mm x 60±1mm x 5±0.5mm, including 15±5mm width of the weld metal part(excluding heat affected zone). This surface is to be ground to bare steel and polished to 600 grit finish.

(g) The surface of the test piece, except for the tested surface, shall be protected from corrosive envi-ronment in order not to affect the test results.

(h) The test apparatus consists of a double chamber, and the temperature of the outer chamber is to be controlled.

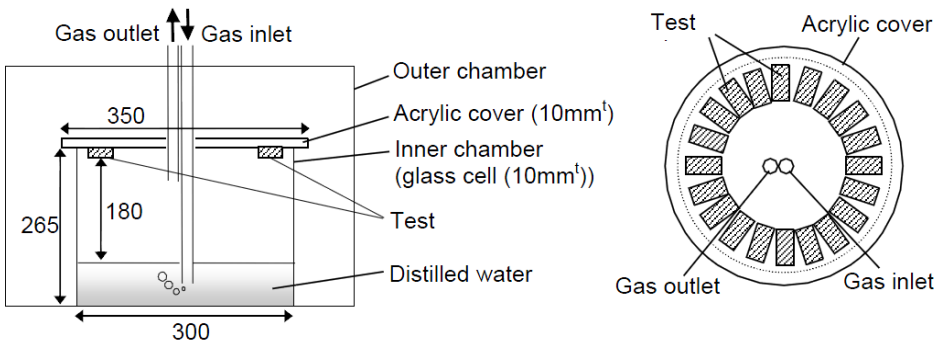

Fig 3.32.2 An example of simulated corrosion test apparatus for upper deck

(i) All the base material specimens should be located in one tank. **Fig 3.32.2** only shows locations of 20 specimens. The tank can be designed to hold 25 or more specimens; alternatively specimens can be added and removed as necessary so that the appropriate time periods are achieved within the total timescale of 98 days.

(j) Welded specimens may be tested with the parent material tests or tested separately against 5 conventional steel specimens.

(k) Since certain factors such as control and measurement of temperature and size of chamber may affect the corrosion rate achieved, it should be confirmed that the corrosion rate of conventional steel in the conditions and equipment of the test, satisfies the rate criteria, before carrying out corrosion test for evaluation of corrosion resistant steel.

(l) To remove specimens, the chamber is to be purged with 100% nitrogen gas while the specimens are in the high temperature region until the specimens are dry.

(m) Simulating the condition of the actual upper deck, the test cycle runs with distilled water and simulated COT gas (4±1% O_2, 13±2% CO_2, 100±10ppm SO_2, 500±50ppm H_2S, 83±2% N_2). A sufficient distance between the surface of the test piece and the distilled water is to be kept to avoid splashing of distilled water. The minimum gas flow rate is 100 cc per minute for the first 24 hours and 20 cc per minute after 24 hours.

(n) The test pieces shall be heated for 19±2 h at 50±2°C and 3±2 h at 25±2°C and the transition time is to be at least 1 h. The time for 1 cycle is 24 h. The temperature of the distilled water is to be kept at not higher than 36°C, while the temperature of the test pieces is 50°C.

(o) The cycling pattern of specimen temperature and temperature of distilled water should be controlled such that each cycle is as identical as possible throughout the whole corrosion test period. These temperatures must be recorded. See **Fig. 3.32.3**

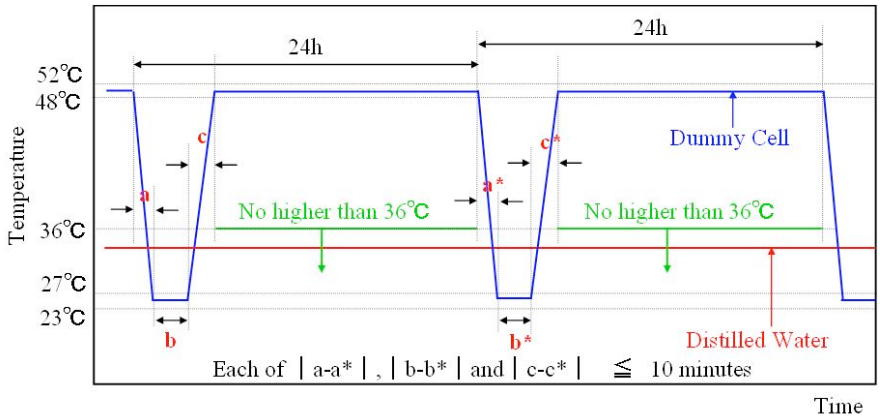

Fig 3.32.3 Schematic view of temperature controlling accuracy of specimens and distilled water during corrosion test

(p) The transition time, a, a*, c and c* in **Fig 3.32.3** is the time from when the cooling and heating commences until the lower or upper temperature is reached, see **Fig 3.32.4** The transition of each cycle is to be as identical as possible throughout the whole corrosion test period. The temperature of both the specimens and the water is to be continuously recorded throughout the test.

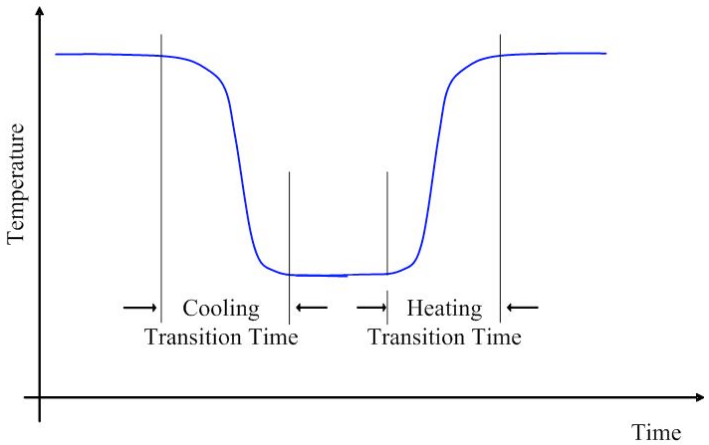

Fig 3.32.4 Transition time definition

(2) **Test results of base metal**

(A) Prior to the testing, the following measured data shall be reported:

(a) size and weight of the test piece

(B) After the testing, the following measured data shall be reported:

(a) weight loss (difference between initial weight and weight after testing) of conventional steel (W_C) and corrosion resistant steel(W_{21}, W_{49}, W_{77} and W_{98});

(C) Specimens are to be weighed to an accuracy of ±1 mg.

(D) Corrosion loss of conventional steel (CL_c) and corrosion resistant steel (CL_{21}, CL_{49}, CL_{77} and CL_{98}), calculated by the following formulae:

$$CL_C(mm) = \frac{10 \times W_C}{S \times D} \quad CL_{21}(mm) = \frac{10 \times W_{21}}{S \times D} \quad CL_{49}(mm) = \frac{10 \times W_{49}}{S \times D}$$

$$CL_{77}(mm) = \frac{10 \times W_{77}}{S \times D} \quad CL_{98}(mm) = \frac{10 \times W_{98}}{S \times D}$$

whereby:

W_C : weight loss of conventional steel (g) (average of five test pieces)
W_{21}: weight loss of corrosion resistant steel after 21 days (g) (average of five test pieces)
W_{49}: weight loss of corrosion resistant steel after 49 days (g) (average of five test pieces)
W_{77}: weight loss of corrosion resistant steel after 77 days (g) (average of five test pieces)
W_{98}: weight loss of corrosion resistant steel after 98 days (g) (average of five test pieces)
S : surface area (cm^2)
D : density (g/cm^3).

(E) The test is considered to be carried out appropriately if CL_c is between 0.05 and 0.11 (corrosion rate is between 0.2 and 0.4mm/year).

(F) Where the calculated corrosion loss of conventional steel is less than 0.05 mm/year, the concentration of H_2S may be increased in the simulated cargo oil tank gas. All tests will be carried out at this increased level.

(G) At least 3 values of individual weight loss of conventional steel should be in the range of maximum X and minimum Y measured in grams.

X= (0.11 x S x D)/10
Y= (0.05 x S x D)/10

whereby:

S = Surface area (cm^2)
D = Density (g/cm^3)

(H) Coefficients A and B of corrosion resistant steel, calculated from the test results for 21, 49, 77 and 98 days by least square method. Corrosion loss of corrosion resistant steel is described as follows:

$$CL = A \times t^B$$

A(mm) and B : coefficient
t : test period(days)

(I) Estimated corrosion loss after 25 years (ECL) calculated by the following formula:

$$ECL(mm) = A \times (25 \times 365)^B$$

(3) **Test results of welded joint**

(a) Sampling of test specimens, magnification of photomicrograph and evaluation of discontinuous surface to be in accordance with requirements in **3205. 3.**.

(4) **Acceptance criteria**

The test results based on provisions of (2) and (3) above shall satisfy the following criteria:

(a) ECL(mm) $\leq$ 2 (for base metal)
(b) no discontinuous surface (e.g., step) between the base metal and weld metal (for welded joint)

(5) **Test report**

The test report shall include the following information:

(a) name of the manufacturer
(b) date of tests
(c) chemical composition and corrosion resistant process of steel
(d) test results according to (2) and (3) above
(e) judgement according to (4) above

2. Test on simulated inner bottom conditions

(1) **Test condition**

Tests on simulated inner bottom conditions in cargo oil tanks (COT) should satisfy each of the following conditions:

(a) The test shall be carried out for 72 h for base metal, and 168 h for welded joint.
(b) There are to be at least five test pieces of corrosion resistant steel for base metal and welded joint, respectively. For comparison, at least five test pieces of base metal of conventional steel should be tested in the same condition.
(c) The conventional steel used should also meet the requirements of **Table 3.32.2** of this Appendix. The mechanical properties of the test specimen should be representative of steel used in its intended shipboard application.
(d) Base material is to be prepared such that one surface is to be taken from a position within 2 mm of one rolled surface. The size of each test piece is 25±1mm x 60±1mm x 5±0.5mm. All surfaces are to be ground to bare steel and polished with an emery paper #600, except a hole for hanging.

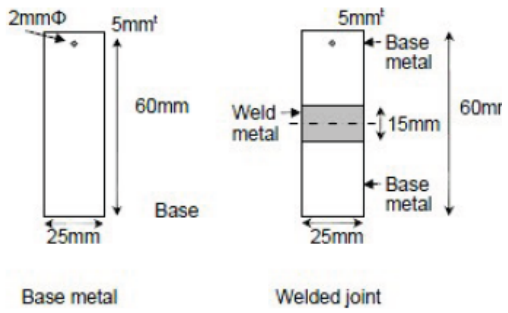

Fig 3.32.5 Test piece

(e) For welded samples, a test assembly is to be made from the same steel cast as the base material test in (d) but may be from a plate of different thickness. The assembly is to be welded using the process and consumable to be approved for use with the base material. The size of the test piece for a welded joint is 25±1mm x 60±1mm x 5±0.5mm, including 15±5mm width of the weld metal part(excluding heat affected zone). This surface is to be ground to bare steel and polished to 600 grit finish.
(f) The samples are hung in a solution from a fishing line (0.3 mm to 0.4 mm in diameter, made of nylon) to avoid crevicelike and/or localized corrosion. An example of a corrosion test configuration is shown in **Fig 3.32.6**

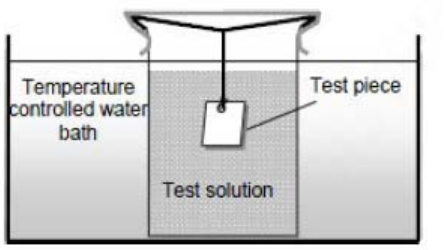

Fig 3.32.6 Simulated corrosion test apparatus for inner bottom

(g) The test solution contains 10 mass% NaCl and its pH is 0.85 adjusted by HCl solution. The test solution should be changed to a new one every 24 h to minimize pH change of the test solution. The volume of the solution is more than 20 cc/cm^2 (surface area of test piece). The temperature of the test solution is to be kept at 30 ± 2°C.

(2) **Test results of base metal**

(A) Prior to the testing, the following data shall be measured and reported:
(a) size and weight of test piece.
(B) After the testing, the following measured data shall be reported:
(a) weight loss (difference between initial weight and weight after testing)
(C) Specimens are to be weighed to an accuracy of ± 1 mg.
(D) Corrosion rate (C.R.) calculated by the following formula:

$$C.R.(mm/year) = \frac{365(days) \times 24(hours) \times W \times 10}{S \times 72(hours) \times D}$$

whereby:

W: Weight loss(g), S: Surface area(cm^2), D: Density(g/cm^3)

(E) To identify specimen which hold crevice and/or localized corrosion, the C.R. is to be plotted on a normal distribution statistic chart. One specimen that has a corrosion rate deviating from the average corrosion rate by more than +25% may be eliminated from the results, provided that the cause of the accelerated corrosion is demonstrated to be due to localized corrosion around the hanging hole and/or stamp (e.g. crevice corrosion, pitting corrosion, etc.). C.R. data which deviate from the normal statistical distribution must be eliminated from the test results. An example is shown in **Fig 3.32.7** for reference.

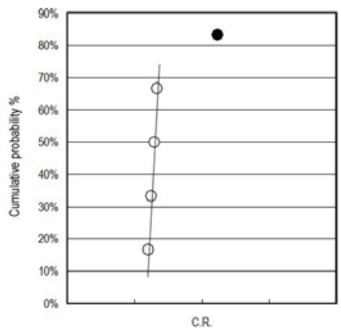

Fig 3.32.7 An example of plot of C.R.s on a normal distribution chart
(In this case C.R. data • should be abandoned and eliminated.)

(F) Calculation of average of C.R.'s data (C.R. ave)

(3) **Test results of welded joint**

(A) Sampling of test specimens, magnification of photomicrograph and evaluation of discontinuous surface to be in accordance with requirements in **3205. 3.**.

(4) **Acceptance criterion**

The test results based on (2) and (3) above shall satisfy the following criteria:

(A) C.R.ave (mm/ year) ≤ 1.0 (for base metal)

(B) no discontinuous surface (e.g., step) between the base metal and weld metal (for welded joint)

(5) **Test report**

The test report shall include the following information:

(A) name of the manufacturer

(B) date of tests

(C) chemical composition and corrosion resistant process of steel

(D) test results according to (2) and (3) above

(E) judgement according to (4) above

3. Interpretation of weld discontinuity

(1) **Preparation of samples after corrosion test**

(a) All five samples are to be prepared as follows.

(b) Two full thickness specimens approximately 20 mm long x 5 mm wide are to be sectioned with their principle axis perpendicular to the weld fusion line. Each specimen is to be located such that the weld fusion line is located approximately at its mid length. See **Fig 3.32.8**.

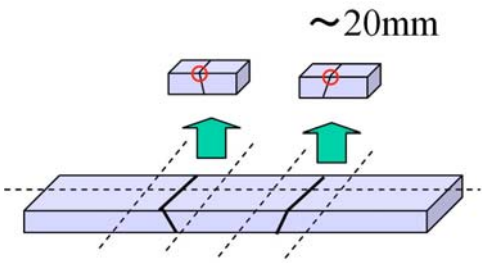

Fig 3.32.8 Sectioning plan

(c) The specimens are to be mounted in resin to allow polishing of the cross section. The specimens are to be etched in Nital after polishing to reveal the fusion boundary.
(d) A photomicrograph is to be taken at a magnification of approximately 100 X.

(2) **Evaluation of depth step**

(A) On the photomicrograph, construct a line A-B, perpendicular to the corrosion surface through the point where fusion line and the surface cross. See **Fig 3.32.9**.

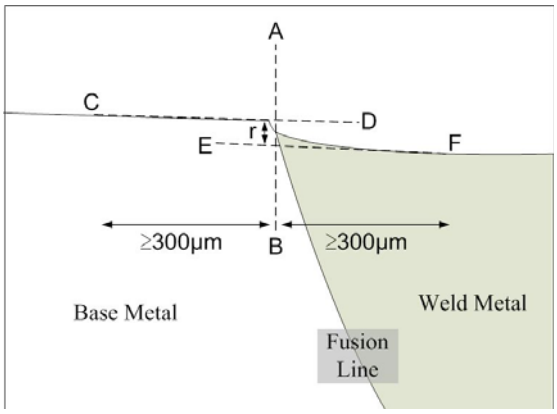

Fig 3.32.9 Determination of corrosion depth on photomicrograph

(B) Construct two parallel lines C-D and E-F one representing the higher level, the other the lower level. Each line is to be constructed over a distance of ≥ 300 μm from line A-B on the base metal and weld metal side, respectively.
(C) Measure the distance r mm between the intersection point at line A-B and each average surface line on the photomicrograph.
(D) If the intersection point at line A-B and average surface line of welded metal part is above that of base metal part, then the existence of step should be neglected for this sample.
(E) Calculate the depth of discontinuous step R in μm from the actual photomicrograph magnification M as follows.

$$R(\mu m) = \frac{r(mm) \times 1000}{M}$$

(3) **Evaluation of step angle**

(A) Evaluation for angle of step is unnecessary if the depth of step calculated on both samples see (2) above, are not greater than 30 μm or if either step exceeds 50 μm for a single specimen. Otherwise the angle of step is to be calculated as follows.
(B) Produce a photomicrograph at a magnification of approximately 250 X, see **Figure 3.32.10**.
(C) Draw an average surface line C-D for base metal part and E-F for weld metal part.
(D) Find the closest intersection point with the step of the base metal surface profile and the constructed line C-D and the closest intersection point with the step for weld metal constructed line E-F respectively, and connect those two intersection points.

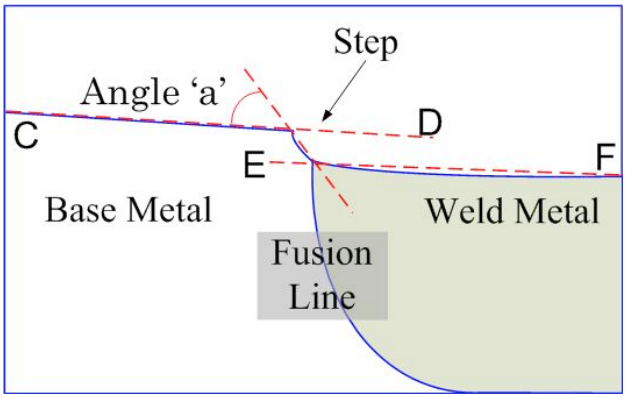

Fig 3.32.10 Calculation of step angle

(E) Measure the angle 'a' in degrees given by the line C-D and the connected line described in (D) above.

(4) **Acceptance Criteria**

(A) If the depth of both steps are less than or equal to 30 μm then the measurement of angle is unnecessary, and the sample is considered to be acceptable.

(B) If the depth of steps on both photomicrographs are less than or equal to 50 μm and in addition if both the measured angles are less than or equal to 15 degrees, then the sample is considered to be acceptable.

(C) If either of the conditions described in (A) or (B) above are not in compliance, the sample is considered to contain a "discontinuous surface"and fails the test.

(D) Welds should be evaluated as "without discontinuous surface" when all 5 corrosion test samples are considered acceptable.

3206. Type Approval Certificates

1. After completion of the approval test, the manufacturer is to produce the report of the approval test and submit it to the Society.

2. The Society is to issue a Type Approval Certificate, such as FORM AC-2 shown in **Annex 2** of this Guidance to the applicant, where deemed appropriate by the Society on the basis of the submitted test reports after completion of the type test.

3. The Type Approval Certificate for approved corrosion resistant steel is to include the following items:

(1) Brand name, manufacturer and certificate number
(2) Steel grade and area of application designation
(3) Chemical composition range (including additive and/or controlling element percentages to improve corrosion resistance)
(4) Maximum thickness
(5) Steelmaking process
(6) Casting process
(7) Delivery condition
(8) Brand of welding consumables and welding method
(9) Period of validity of approval

4. Validity and renewal of approval certificate are to be in accordance with **Ch 3**, **Ch 1**, **108.** of this Guidance.

3207. Changes in the approved contents

1. Where the scope of approval changes, for example for additions to the applicable welding consumables, the effects of these changes are to be subjected to corrosion resistance tests for the welded joints.

Section 33 Protective Coating Systems for Cargo Oil Tanks

3301. Application

The requirements of this Section apply to tests and inspection for the type approval of protective coating systems in accordance with the requirements in **Pt 3, Ch 1, 801. 2.** of the Guidance.

3302. Data to be submitted

1. The following approval data are to be submitted to the Society in addition to those specified in **102.**

(1) Copy of Technical Data Sheet, including : 3 copies
(a) product name and identification mark and/or number;
(b) materials, components and composition of the coating system, colours;
(c) minimum and maximum dry film thickness;
(d) application methods, tools and/or machines;
(e) condition of surface to be coated (de-rusting grade, cleanness, profile, etc.); and
(f) environmental limitations (temperature and humidity);
(g) dry-to recoat times and walk-on time
(2) Compatibility of shop primer with protective coating system : 3 copies(if any)
(3) Inspection and acceptance criteria of protective coating system : 3 copies
(4) Procedures for repair of protective coating system : 3 copies

2. The coating manufacturer should provide to the Society the following information;

(1) A detailed list of the production facilities.
(2) Names and location of raw material suppliers will be clearly stated.
(3) A detailed list of the test standards and equipment to be used, (Scope of approval).
(4) Details of quality control procedures employed.
(5) Details of any sub-contracting agreements.
(6) List of quality manuals, test procedures and instructions, records, etc.
(7) Copy of any relevant certificates with their issue number and/or date e.g. Quality Management System certification.
(8) Material safety Data Sheet

3303. Data review and plant audit

1. The Society shall performed the data review and plant audit specified in **Pt. 1, Annex 1-11, 2. and 3.** of **the** Guidance Relating to the Rules for the Classification of Steel Ships to assure the manufacturing process (including that of subcontractor's works) and quality assurance of the protective coating systems.

2. With the exception of early ‘scale up’ from lab to full production, adjustment outside the limitations listed in the QC instruction referred to below is not acceptable.

3. Unless justified by trials during the coating system’s development programme, or subsequent testing. Any such adjustments must be agreed by the formulating technical centre. If formulation adjustment is envisaged during the production process the maximum allowable limits will be approved by the formulating technical centre and clearly stated in the QC working procedures.

4. The manufacturer’s quality control system will ensure that all current production is the same formulation as that supplied for the Type Approval Certificate. Formulation change is not permissible without testing in accordance with the test procedures in this Section and the issue of a Type Approval Certificate by the Society.

5. Batch records including all QC test results such as viscosity, specific gravity and airless spray characteristics will be accurately recorded. Details of any additions will also be included.

6. Whenever possible, raw material supply and lot details for each coating batch will be traceable. Exceptions may be where bulk supply such as solvents and pre-dissolved solid epoxies are stored in tanks, in which case it may only be possible to record the supplier’s blend.

7. Dates, batch numbers and quantities supplied to each coating contract will be clearly recorded.

8. All raw material supply must be accompanied the supplier's 'Certificate of Conformance'. The certificate will include all requirements listed in the coating manufacturer's QC system.

9. In the absence of a raw material supplier's certificate of conformance, the coating manufacturer must verify conformance to all requirements listed in the coating manufacturer's QC system.

10. Drums must be clearly marked with the details as described on the 'Type Approval Certificate'.

11. Technical Data Sheets must comply with all the PSPC requirements. The QC system will ensure that all Product Technical Data Sheets are current.

12. QC procedures of the originating technical centre will verify that all production units comply with the above stipulations and that all raw material supply is approved by the technical centre.

3304. Performance standard

1. Protective coating systems are, in principal, to be an epoxy-based systems. All systems that are not an epoxy-based system applied according to this requirements are defined as an alternative system.

2. A multi-coat system with each coat of contrasting colour is recommended. The top coat shall be of a light colour(a colour that reflects light to an extent that a simple flash light (hand torch) will make inspection easy and fast. Normally light grey, buff, off-white, swimming pool blue/green, etc. easily distinguishable from rust.) in order to facilitate in-service inspection.

3. Protective coatings for Cargo Oil Tanks of Crude Oil Tankers shall satisfy the approval tests specified in **3306. 2.** and **3..**

4. Epoxy-based systems which have documented field exposure for 5 years with a final coating condition of not less than "GOOD" may be accepted. In this case, field exposure for 5 years shall be satisfied following conditions.

(1) Coating manufacturer's records should include the information indicated in followings and should be examined to confirm coating system has 5 years field exposure, and the current product is the same as that being assessed.
- (a) Original application records
- (b) Original coating specification
- (c) Original technical data sheet,
- (d) Current formulation's unique identification (Code or number)
- (e) If the mixing ratio of base and curing agent has changed, a statement from the manufacturer confirming that the composition of the mixed product is the same as the original composition. This should be accompanied by an explanation of the modifications made.
- (f) Current technical data sheet for the current production site
- (g) SG(Specific Gravity) and IR(Infra Red) identification of original product
- (h) SG and IR identification of the current product
- (i) If original SG and IR cannot be provided then a statement from the manufacturer confirming the readings for the current product are the same as those of the original.

(2) Either class survey records should be reviewed, or A joint (coating manufacturer/Society) survey of cargo tanks of a selected vessel should be carried out, to verify compliance with the requirements of (1) and (5). The coating manufacturer's representative is to be qualified to *NACE Coating Inspector Level 2* or *FROSIO Inspector Level III* or equivalent as verified by the Administration.

(3) The selected vessel should have cargo tanks in regular use, of which:
- (a) At least one tank is exposed to minimum temperature of 60 degree C plus or minus 3 degree
- (b) For field exposure the ship should be trading in varied trade routes and carrying substantial varieties of crude oils including highest temperature and lowest pH limits to provide a realistic sample: for example, three ships on three different trade areas with different varieties of crude cargoes.

(4) In the case that the selected vessel does not meet the requirements in (3) then the limitations on lowest pH and Highest temperature of crude oils carried should be clearly stated on the type approval certificate.

(5) All cargo tanks should be in "GOOD" condition excluding mechanical damages, without touch up or repair in the prior 5 years. 2.6.1 "Good" is defined as: Condition with spot rusting on less than 3% of the area under consideration without visible failure of the coating. Rusting at

edges or welds, must be on less than 20% of edges or welds in the area under consideration. "Area under consideration" is the area defined as per PSPC-COT 4.4 and 4.5. In evaluating the figures given in the definition, an under deck area and an inner bottom area are to be treated separately.

5. In the case that a manufacturer wishes to have products which are manufactured in different locations under the same name, then infrared (IR) identification and specific gravity shall be used to demonstrate that they are the same coating, or individual approval tests will be required for the paint manufactured in each location.

3305. Test Laboratory

The test laboratory where testing is carried out in accordance with the requirements in **3304. 3.** is to equip the test facilities so that they can perform the testing in accordance with the requirements in this Sec. and are to be accredited by any of followings;

(1) KoreaLaboratoryAccreditationScheme(KOLAS)
(2) International Laboratory Accreditation Cooperation(ILAC) or equivalent qualification
(3) ISO 9000 Quality Management System

3306. Type test

1. General

(1) **Application of protective coating system**

(a) There shall be a minimum of two stripe coats and two spray coats, except that the second stripe coat, by way of welded seams only, may be reduced in scope where it is proven that the NDFT can be met by the coats applied, in order to avoid unnecessary over-thickness.
(b) Stripe coats shall be applied by brush or roller.
(c) Each main coating layer shall be appropriately cured before application of the next coat, in accordance with coating manufacturer's recommendations.
(d) Surface contaminants such as rust, grease, dust, salt, oil, etc., shall be removed prior to painting with proper method according to the paint manufacturer's recommendation. Abrasive inclusions embedded in the coating shall be removed. Job specifications shall include the dry-to-recoat times and walk-on time given by the manufacturer.
(e) NDFT 320 μm with 90/10 rule(A 90/10 rule means that 90% of all thickness measurements shall be greater than, or equal to, NDFT and none of the remaining 10% measurements shall be below 0.9 x NDFT) for epoxy-based coatings; other systems to coating manufacturer's specifications.
(f) Maximum total dry film thickness according to manufacturer's detailed specifications.
(g) Care shall be taken to avoid increasing the thickness in an exaggerated way. Wet film thickness shall be regularly checked during application.
(h) Thinner shall be limited to those types and quantities recommended by the manufacturer.

(2) **Test gas composition**

The test gas is based on the composition of the vapour phase in crude oil tanks and is to comply with the **Table 3.33.1**

Table 3.33.1 Test gas composition

Test gas	composition	Remark
N_2	83±2%	Volume of dry gas
CO_2	13±2%	Volume of dry gas
O_2	4±1%	Volume of dry gas
SO_2	300±20 ppm	
H_2S	200±20 ppm	

(3) **Test liquid**

(a) start with distillate Marine Fuel, DMA Grade density at 15ºC: maximum 890 kg/m^3, viscosity of maximum 6 mm^2/s at 40ºC (refer to KS M ISO 8217) ;
(b) add naphthenic acid up to an acid number of 2.5±0.1 mg KOH/g (refer to KS M ISO 6618) ;

(c) add benzene/ toluene (1:1 ratio) up to a total of 8.0±0.2% w/w of the DMA;
(d) add artificial seawater (refer to ASTM D1141) up to a total of 5.0±0.2% w/w to the mixture ;
(e) add H_2S dissolved in a liquid carrier (in order to get 5±1 ppm w/w H_2S in the total test liquid);
(f) thoroughly mix the above constituents immediately prior to use; and
(g) once the mixture is completed, it should be tested to confirm the mixture is compliant with the test mixture concentrations.
(h) To prevent the risk of H_2S release into the test facility, it is recommended to use a stock solution for steps (a) to (d), then fill the test containers and complete the test solution with steps (e) and (f).

2. Gastight cabinet test

(1) Test condition

The vapour test shall be carried out in a gastight cabinet. The dimensions and design of the air tight gas cabinet are not critical, provided the requirements of subparagraphs (f) to (j) below are met.

(a) The exposure time is 90 days.
(b) Testing shall be carried out using duplicate panels;a third panel shall be prepared and stored at ambient conditions to act as a reference panel during final evaluation of the test panels.

(c) The size of each test panel is 150 mm x 100 mm x 3 mm.
(d) The panels shall be treated according to **1.** (1) above.
(e) The zinc silicate shop primer, when used, shall be weathered for at least 2 months and cleaned by low pressure fresh water washing. The exact method of shop primer preparation before being over coated shall be reported, and the judgement issued for that specific system. The reverse side and edges of the test piece shall be coated appropriately, in order not to influence the test results.
(f) Inside the gastight cabinet a trough shall be present. This trough shall be filled with 2 ± 0.2 l of water. The water in the trough shall be drained and renewed prior to each time the test gas is refreshed.
(g) The vapour spaces inside the gastight cabinet shall be filled with a mixture of test gas as per **1.** (2) above. The cabinet atmosphere shall be maintained over the period of the test. When the gas is outside the scope of the test method, it shall be refreshed. The monitoring frequency and method, and the date and time for refreshing the test gas, shall be in the test report.
(h) The atmosphere in the test cabinet shall at all times be 95 ± 5% relative humidity.
(i) Temperature of the test atmosphere shall be 60 ± 3 °C.
(j) A stand for the test panels shall be made of a suitable inert material to hold the panels vertically spaced at least 20 mm between panels. The stand shall be positioned in the cabinet to ensure the lower edge of the panels is at least 200 mm above the height of the water and at least 100 mm from the walls of the cabinet. If two shelves are in the cabinet, care shall be taken to ensure solution does not drip on to the lower panels.

(2) Test results

(A) Prior to testing, the following measured data of each coating composing the coating system, including the zinc silicate shop primer when used under the coating system, shall be reported:
  (a) infrared (IR) identification of the base and hardener components of the coating;
  (b) specific gravity (refer to KS M ISO 2811-1/4) of the base and hardener components of the paint; and
  (c) mean dry film thickness (DFT) (by using a template). (*Six equally distributed measuring points are used on panels size 150mm x 100mm.*)
(B) After completion of the test duration, the panels shall be removed from the cabinet and rinsed with warm tap water. The panels shall be dried by blotting with absorbent paper and, then, evaluated for rust and blistering within 24 hours of the end of the test.
(C) After testing, the following measured data shall be reported:
  (a) blisters and rust. (refer to KS M ISO 4628-2 and KS M ISO 4628-3)

(3) Acceptance criteria

(A) The test results based on (2) above shall satisfy the following criteria, the poorest performing of the duplicate test panels shall be used in the report:

Item	Acceptance criteria for epoxy-based system	Acceptance criteria for alternative system
Blisters on panel	No blister	No blister
Rust on panel	Ri 0 (0%)	Ri 0 (0%)

(B) When evaluating test panels, blistering or rusting within 5 mm of the panel edge shall be ignored.

(4) **Test report**

The test report shall include the following information:

(A) coating manufacturers' name and manufacturing site;

(B) dates of test;

(C) product name/identification of each coat and, where applicable, zinc silicate shop primer;

(D) batch numbers of each component of each product;

(E) details of surface preparation of steel panels, before shop primer application, and treatment of the shop primer before over coating where relevant and at a minimum including the following:

(a) surface treatment, or treatment of weathered shop primer, and any other important information on treatment influencing the performance; and

(b) water soluble salt level measured on the steel prior to application of the shop primer(refer to KS M ISO 8502)

(F) details of coating system, including the following:

(a) zinc silicate shop primer if relevant, its secondary surface pretreatment and condition under which applied, weathering period;

(b) number of coats, including the shop primer and thickness of each;

(c) mean dry film thickness (DFT) prior to testing

(d) thinner if used;

(e) humidity;

(f) air temperature;

(g) steel temperature;

(G) details of schedule for refreshing the test gas;

(H) test results according to **2.** (2); and

(I) results according to **2.** (3).

3. Immersion test

(1) **Test condition**

(a) The exposure time is 180 days.

(b) The test liquid should be made as per **1.** (3) above.

(c) The test liquid should be added to a container with an inside flat bottom until a column of the test liquid of height of 400 mm is reached, resulting in an aqueous phase of 20 mm. Any other alternative test setup, using an identical test liquid, which will also result in the immersion of the test panel in 20 mm of the aqueous phase, is also accepted. This can be achieved by using, for instance, inert marbles.

(d) The temperature of the test liquid should be 60 ± 2℃ and should be uniform and maintained constant with recognized methods such as water or oil bath or air circulation oven capable of keeping the immersion liquid within the required temperature range.

(e) Test panels shall be positioned vertically and fully immersed during the test.

(f) Testing shall be carried out using duplicate panels.

(g) Inert spacers which do not cover the test area shall be used to separate test panels.

(h) The size of each test panel is 150 mm x 100 mm x 3 mm.

(i) The panels shall be treated according to **1.** (1) above.

(j) The zinc silicate shop primer, when used, shall be weathered for at least 2 months and cleaned by low pressure fresh water washing. The exact method of shop primer preparation before being over coated shall be reported, and the judgment issued for that specific system. The reverse side, and edges, of the test piece shall be coated appropriately, in order not to influence the test results.

(k) After the full immersion test period is completed the panels shall be removed from the test liquid and wiped with dry clean cloth before evaluation of the panels.

(l) Evaluation of the test panels shall be done within 24 hours after completion of the test.

(2) **Test results**

(A) Prior to testing, the following measured data of each coating composing the coating system, including the zinc silicate shop primer when used under the coating system, shall be reported:

(a) infrared (IR) identification of the base and hardener components of the coating;

(b) specific gravity of the base and hardener components of the paint (refer to KS M ISO 2811-1/4) ;

(c) mean dry film thickness (DFT) (by using a template). (*Six equally distributed measuring points are used on panels size 150mm x 100mm.*)

(B) After testing, the following measured data shall be reported:

(a) blisters and rust (refer to KS M ISO 4628-2 and KS M ISO 4628-3)

(3) **Acceptance criteria**

(A) The test results based on (2) above shall satisfy the following criteria, the poorest performing of the duplicate test panels shall be used in the report.:

Item	Acceptance criteria for epoxy-based system	Acceptance criteria for alternative system
Blisters on panel	No blister	No blister
Rust on panel	Ri 0 (0%)	Ri 0 (0%)

(B) When evaluating test panels, blistering or rusting within 5 mm of the panel edge should be ignored.

(4) **Test report**

The test report shall include the following information:

(A) coating manufacturers' name and manufacturing site;

(B) dates of test;

(C) product name/identification of each coat and, where applicable, zinc silicate shop primer;

(D) batch numbers of each component of each product;

(E) details of surface preparation of steel panels, before shop primer application, and treatment of the shop primer before over coating where relevant and at a minimum including the following:

(a) surface treatment, or treatment of weathered shop primer, and any other important information on treatment influencing the performance; and

(b) water soluble salt level measured on the steel prior to application of the shop primer(refer to KS M ISO 8502)

(F) details of coating system, including the following:

(a) zinc silicate shop primer if relevant, its secondary surface pretreatment and condition under which applied, weathering period;

(b) number of coats, including the shop primer and thickness of each;

(c) mean dry film thickness (DFT) prior to testing

(d) thinner if used;

(e) humidity;

(f) air temperature;

(g) steel temperature;

(G) test results according to **3.** (2) above; and

(H) results according to **3.** (3) above.

3307. Type Approval Certificates

1. If the type tests specified in **3304. 3.** or 5 years field exposure test specified in **3304. 4.** are satisfactory, a Type Approval Certificate will be issued to include both the epoxy and the shop primer.

2. In case where 5 years field exposure test specified in **3304. 4.** are performed, The Type Approval Certificate shall reference the joint survey report specified in **3304. 4.** (2)

3. In case where 5 years field exposure test specified in **3304. 4.** are performed, If the applied NDFT is greater than required in **3306. 1.** (1), (e) the applied NDFT will be the minimum to be applied during construction. This will be reported prominently on the Type Approval Certificate.

4. In case where the epoxy has been tested without shop primer on bare prepared steel with satisfactory, a Type Approval Certificate will be issued. The Type Approval Certificate will just record the epoxy.

5. The Type Approval Certificate is invalid if the formulation of either the epoxy or the shop primer is changed. It is the responsibility of the manufacturer to inform class immediately of any changes to the formulation.

3308. Compatability of shop primer

1. If a zinc silicate shop primer has passed the type test as part of an epoxy coating system, it may be used in combination with other approved epoxy coatings provided that the compatibility has been confirmed by the immersion test of **3306. 3.** or test in accordance with **Ch 3, Sec 30** in this Guidance.

2. In case where same epoxy coating system is to applied on the different shop primers, each combination to be type tested in accordance with **3304.**. However, if each shop primer have already passed the type test as part of an epoxy coating system, the compatibility of shop primer can be confirmed by the test in accordance with **1.** above.

3. If the test or tests specified above **1.** are satisfactory, a Type Approval Certificate will be issued. In this instance the Type Approval Certificate will include the details of the epoxy and a list of all shop primers with which it has been tested that have passed these requirements.

3309. Dealing after approval

1. The protective coating systems satisfied for the tests specified in **3304. 3.** are to be allowed the use of the epoxy with all the named shop primers or on bare prepared steel.

2. The protective coating systems satisfied for the tests without shop primer according to **3307. 4.** are to be allowed the use of the epoxy on bare prepared steel only.

3. In all cases of approval by 5 years field exposure test specified in **3304. 4.**, the shop primer shall be removed prior to application of the approved epoxy based system coating, unless it can be confirmed that the shop primer applied during construction, is identical in formulation to that applied in the selected vessel used as a basis of the approval.

3310. Alternative systems

1. All systems that are not applied according to **IMO PSPC(IMO Resolution 288(87)) 4.6** are defined as an alternative system.

2. Acceptance of alternative systems will be subject to documented evidence that they ensure a corrosion prevention performance at least equivalent to that indicated in **IMO PSPC.**

3. The documented evidence shall consist of satisfactory performance corresponding to a target useful in either actual field exposure of continuous trading with crude oil cargoes for 5 years with final coating condition not less than "GOOD" or testing according to this Section.

Section 34 Fiber Reinforced Plastic Gratings

3401. Application

1. The requirements of this Section apply to tests and inspection for the type approval of fiber reinforced plastic(hereinafter refer to FRP) gratings used in gangway for safe access to tanker bows in accordance with the requirements in **Pt 4, Ch 4, Sec 5** of the Guidance.

2. In case where gratings used in lieu of steel gratings other than FRP gratings, the requirements of this Section can be applied.

3. The manufacturers wishing to obtain the approval of the Society for FRP gratings used in service location specified in **Table 3.34.1** other than gangway are to comply with the requirements of this Chapter.

3402. Data to be submitted

The following reference data are to be submitted to the Society in addition to those specified in **102.**

(1) Dimensions of gratings
(2) Design temperature
(3) Installation locations and serviceable life
(4) The level of fire integrity
(5) Electrostatic property
(6) Installation instructions(including precautions to be taken at work site, repari procedures and criteria for determining whether repairs are necessary or not)
(7) Details of marking
(8) Drawings and supporting documentation
  (a) Certificates and reports for relevant tests previously carried out
  (b) Details of relevant standards
  (c) All relevant design drawings, catalogues, data sheets, calculations and functional descriptions
  (d) Fully detailed sectional assembly drawings showing gratings
(9) Materials
  (a) The resin type
  (b) The reinforcement type
  (c) A detailed statement of all reinforcements employed in cases where a reference number for the filament winding process is not specified
  (d) Full information regarding the type of gel-coat or thermoplastic liner employed during construction, as appropriate.
  (e) Cure/post-cure conditions. The cure and post cure temperatures and times employ resin/reinforcement ratio.
  (f) Winding angle and orientation.
(10) Packing and marking methods
(11) Process of manufacture
(12) Service records
(13) The outline of company and data on major manufacturing facilities
(14) Data of quality control system
(15) Documents on types of joints and working procedures
(16) Details on the bonding procedures
  (a) Bonding method and material used
  (b) Joints and Tools with fixtures
  (c) Cure temperature
  (d) Dimensional requirements and tolerance
  (e) Test acceptance criteria upon completion of the assembly

3403. Type tests

1. General

(1) The type tests specified in **Par 2**, **3**, **4** and **5** are to be carried out in the presence of the Surveyor where the submitted documents are considered acceptable.

(2) Applicants are to submit the test plan describing the test place, testing procedure, etc., in advance.
(3) It is recommended that the above test plan is submitted with application form letter.
(4) Test samples are to be picked out, in general, from the products by the direction of the Surveyor upon the survey at confirmation survey.
(5) Three copies of the test record are to be submitted to the Society.
(6) The type tests may be omitted when the test is carried out at a recognized testing organization and the test records are to be submitted to the Society.

2. Fire integrity test *(2017)*

The service and locations for fire integrity test are to comply with the requirements specified in **Table 3.34.1**. The definitions and test procedures for L1, L2, L3 and L0 are also to be as follows. Details of test for fire integrity not specially mentioned in **3403. 2** are to comply with *ASTM F3059-14*.

Tabel 3.34.1 Level for fire integrity *(2017)*

Location	Service	Fire Integrity
Machinery Spaces	Walkways or areas which may be used for escape, or access for firefighting, emergency operation or rescue	L1 (1)
	Personnel walkways, catwalks, ladders, platforms or access areas other than those described above	L3
Cargo Pump Rooms	All personnel walkways, catwalks, ladders, platforms or access areas	L1
Cargo Holds	Walksways or areas which may be used for escape, or access for firefighting, emergency operation or rescue	L1
	Personnel walkways, catwalks, ladders, platforms or access areas other than those described above	L0
Cargo Tanks	All personnel walkways, catwalks, ladders, platforms or access areas	L0
Fuel Oil Tanks	All personnel walkways, catwalks, ladders, platforms or access areas	L0
Ballast Water Tanks	All personnel walkways, catwalks, ladders, platforms or access areas	L0
Cofferdams, void spaces, double bottoms, pipe tunnels, etc.	All personnel walkways, catwalks, ladders, platforms or access areas	L0
Accommodation, service, and control spaces	All personnel walkways, catwalks, ladders, platforms or access areas	- (2)
Lifeboat embarkation or temporary safe refuge stations in open deck areas	All personnel walkways, catwalks, ladders, platforms or access areas	L2
Open Deck or semi-enclosed areas	Operational areas and access routes for deck foam firefighting systems on tank vessels	L2
	Walkways or areas that may be used for escape, or access for firefighting systems and AFFF hose reels, emergency operation, or rescue on MODUs and production platforms including safe access to tanker bows(the areas to comply with the requirements of **3401. 1**)	L2
	Walkways or areas which may be used for escape, or access for firefighting systems, emergency operation or rescue other than those described above	L2
	Personnel walkways, catwalks, ladders, platforms or access areas other than those described above	L2

Notes;
(1) If the machinery space does not contain any internal combustion machinery, other oil burning, oil heating, or oil pumping units, fuel oil filling stations, or other potential hydrocarbon fire sources and has not more than 2.5 kg/m^2 of combustible storage, grating of L3 integrity may be used in lieu of L1.
(2) FRP grating is not permitted.

(1) **Definitions**

(A) **Level 1(L1)**: FRP gratings meeting the L1 performance criteria provide the highest degree of safety and are intended for use in escape routes or areas in which access for firefighting, emergency operation, or rescue is needed after a significant fire exposure that may weaken the gratings. Level 1 gratings may also be used in any areas requiring Levels 2 or 3 gratings.

(B) **Level 2(L2)**: FRP gratings meeting the L2 performance criteria are intended for use in areas in which personnel may need to assemble after the grating has been exposed to a fire and are tested to ensure that they will be able to sustain a post-fire structural loading. Areas in which L2 gratings are specified include temporary safe refuge or lifeboat embarkation stations. Level 2 gratings may also be used in any areas requiring Level 3 gratings.

(C) **Level 3(L3)**: FRP gratings meeting the L3 performance criteria are intended for use in areas used as egress routes or that may require access for firefighting, rescue or emergency operations during or shortly after exposure to a very limited fire not likely involving flammable liquids.

(D) **Level 0(L0)**: FRP gratings have no level of fire integrity. L0 gratings are used for personnel walkways, catwalks, ladders, platforms, or access areas in cargo holds and tanks.

(2) **Test specimens**

(A) A set of two test specimens(one preload and one postload are required for Levels 2 and 3 testing; a set of four test specimens(one preload and three postload) are required for Level 1 testing.

(B) The test specimens are to be tested without any coatings(for example, UV coating, skid-resistant coating, and so forth).

(C) Each test specimen is to be 302 to 352 mm in width to allow for the differences in the spacing of longitudinal load-bearing members. The width is to be measured at the top surface from outside load-bearing member to outside load-bearing member. The length of each test specimen is to be the maximum length to be qualified for service plus 203 mm but a minimum of 1321 mm long. Test specimens are to be cut when required using representative methods and equipment as recommended by the manufacturer.

(D) Test specimens are to be conditioned for a minimum of 24 hours at a temperature of 23±2.8 ℃ and at a relative humidity of 50±5 %.

(3) **Approval test**

(A) The specification of fire conditions based on **ASTM E 119**. The time-temperature curve is to be the standard for **ASTM E 119**.

(B) **Placement of test specimens**

(a) A complete set of test specimens is to be placed in the furnace. More than one set may be placed in the furnace if each whole additional set can be accommodated. Individual specimens of a set are not to be tested in separate runs of the furnace.

(b) The specimens are to be had a minimum 305 mm clearance to the furnace walls and a minimum 610 mm clearance to the furnace floor or more as required ensuring maximum deflection limits can be properly evaluated.

(c) Each specimen is to be simply supported on minimum 102 mm wide steel or concrete supports without any other restraint to simulate the maximum unsupported span. The test specimen is to be placed with 100 mm of each end resting on the supports.

(C) The test for a furnace to be conducted with exposure duration of 60 minutes.

(D) **Data recording**

(a) The furnace temperature measurements are to be recorded at a maximum of 1 minute intervals.

(b) The time at which the vertical deflection of the preload test specimen exceeds a distance equal to the length of the unsupported span divided by 10 is to be recorded. The recorded time is to be within 6 seconds of the occurrence.

(c) The time when each of the unloaded test specimens collapse is to be recorded.

(E) **Preload test**

For the preload test specimen of each set, the 392 N static load is to be applied at the center of the unsupported span of the test specimen. The load is to be applied over 102 mm of the longitudinal span and distributed evenly across the load-bearing members.

(F) **Postload test**

(a) The specimens are to be allowed to cool to ambient conditions before the postload test.

(b) For Level 3, the center load test of (c) is to be conducted. For Level 2, the center load

test of (c) and the uniform load test of (d) are to be consecutively conducted. For Level1, the center load test of (c) and the uniform load test of (d) and the impact test of (e) are to be consecutively conducted for each test specimen and the uniform load test of (d) is to be conducted again.

(c) **Center load test**

(i) Each postload test specimen is to be supported as (B) (c) and is to be ubject to the 392 N static load at center of the unsupported span as required in the preload test of (E). The static load is to be applied for 15 minutes after the specimen appears motionless.

(ii) Whether each test specimen sustained the load without collapse is to be recorded. The specimen touching the ground or falling off the supports is to be considered as a collapse.

(d) **Uniform load test**

(i) Each postload test specimen is to be supported as (B) (c).

(ii) To each, a uniform distributed load in increments not exceeding 196 N until a load of 4.5 kN/m^2 is reached or until collapse, whichever occurs first, is to be applied. Each incremental load is to be applied for at least 5 minutes. The final load is to be applied for 15 minutes after the specimen appears motionless.

(iii) The load resulting in collapse for each specimen is to be recorded. Whether each test specimen sustained the final load without collapse is to be recorded. The specimen touching the ground or falling off the supports is to be considered as a collapse.

(e) **Impact test**

(i) Subject the test specimens to impact testing in accordance with **ASTM E 695**(Standard Method of Measuring Resistance of Wall, Floor, and Roof Construction to Impact Loading).

(ii) The test specimens are to be secured as required in **ASTM E 695** except that the span between supports should be 203 mm less than the pretest specimen length.

(iii) A lead shot bag with a minimum mass of 40 kg is to be dropped one time on each test specimen from a minimum height of 2 m, such that the point of impact is the midpoint of the span.

(4) **Acceptance criteria**

(A) **Level 3(L 3)**

(a) The time for the heat exposure for the preload test specimen exceeds 18 minutes.

(b) The unloaded test specimens are not to be collapsed during the furnace test.

(c) The test specimen after center load test is to be supported the load for the specified duration without collapse.

(B) **Level 2(L 2)**

The FRP gratings are considered to comply with Level 2 structural fire integrity requirements if they meet the requirements of Level 3 structural fire integrity and the test specimen of uniform load test is to be supported the load for the specified duration without collapse.

(C) **Level 1(L 1)**

The FRP gratings are considered to comply with Level 1 structural fire integrity requirements if all three postload specimens meet the requirements of Level 2 structural fire integrity and withstand the impact test in accordance with (3) (e) and subsequent uniform load test in accordance with (3) (d) without collapse.

(D) **Level 0(L 0)**

There are no structural fire integrity requirements.

3. Fire retardance test

All FRP gratings should be fire retardant; this can be demonstrated by testing to **ASTM E 84**(Standard Test Method for the Surface Burning Characteristics of Building Materials) with a flame spread rating not to exceed 25 or by meeting the requirements in **4.** (1) or (2) below.

4. Flame spread and Surface flammability test

All FRP gratings, except those fitted on open decks and within tanks, cofferdams, void spaces, pipe tunnels and ducts, should have low flame spread and surface flammability characteristics as determined by one of the following test procedures. FRP gratings to comply with the requirements of **3401. 1.** should have low flame spread and surface flammability characteristics as determined by (2) of the following test procedures:

(1) When testing to **ASTM E 84** for flame spread characteristics, the flame spread rating is not to exceed 20; or
(2) The test for surface flammability is to comply with the requirements specified in **Table 3.26.7.** of this Guidance(refer to **FTP Code, Annex 1, Part 5** and **IMO Res. MSC. 307(88)**). The criteria established for materials used for bulkheads, linings, or ceilings are to be complies with.

5. Smoke and toxicity test

FRP gratings within accommodation, service and control spaces, should have low smoke characteristics as determined by one of the following test procedures. FRP gratings to comply with the requirements of **3401. 1.** should have low smoke and toxicity characteristics as determined by (2) of the following test procedures:
(1) When testing to **ASTM E 84** for smoke characteristics, the smoke developed rating is not to exceed 10; or
(2) Smoke and toxicity test are to comply with the requirements specified in **Table 3.26.8.** of this Guidance(refer to **FTP Code, Annex 1, Part 2** and **Part 5, Annex 4**). The criteria established for materials used for bulkheads, linings, or ceilings are to be complies with. ⚓

CHAPTER 4 DESIGN APPROVAL

Section 1 General

101. Application

1. The requirements in this Chapter apply to the procedure for the approval of the drawings and documents submitted in advance to the Society designating the construction, dimensions, materials, specifications, etc., as the standardized design for machinery and equipment required to obtain approval by submitting drawings to the Society in accordance with the requirements in **Pt 2, Ch 1, 104.** (4), **Pt 5, Ch 1, 305.** and **Ch 2** and **Pt 9, Ch 1** and **Ch 2** of the Rules.

2. The drawings other than those specified in the Rules may, where deemed appropriate by the Society, be approved upon the request of applicant. In this case the requirements in this Chapter are correspondingly applied.

3. Machinery and equipment specified in **Pt 5, Pt 6** and **Pt 9** of the Rules is to be follows:

(1) **Pt 5, Ch 2** and **Ch 3** of the Rules
- Prime movers: Diesel engines, steam turbines, turbochargers
- Power transmission gears: Reduction gears, reversing gears, flexible couplings
- Shaftings: Propellers

(2) **Pt 5, Ch 5** of the Rules
- Boilers: Boilers, exhaust gas economizers, thermal oil installations
- Pressure vessels: Air tanks, heating devices of fuel oil, other heat exchangers, etc.

(3) **Pt 5, Ch 6** and **Ch 7** of the Rules
- Essential auxiliaries: Pumps, air compressors, steering gears, windlass, winch, blowers, oil-hydraulic motors, etc.

(4) **Pt 6, Ch 1** and **Ch 2** of the Rules
- Electrical equipment: Generators, motors
- Control systems: Remote control devices of main engine, control devices of boiler, etc.

(5) **Pt 9, Ch 1** and **Ch 2** of the Rules
- Refrigerating installations: Compressors, pressure vessels
- Cargo handling arrangements: Construction drawings of cargo handling arrangements

102. Approval application

1. The manufacturers wishing to obtain design approval are to submit a copy of the application of design approval (refer to **Annex 6**) and for approval, three copies and for reference, two copies of the drawings and documents of machinery and equipment according to applicable Rules.

2. Relevant drawings (fully detailed sectional assembly, drawings for main component parts) and documents as belows.

(1) Product specifications
(2) All product details, catalogues, data sheets, calculations and functional descriptions, parts list, etc,(if any)
(3) Application and operational limitation
(4) Drawings showing the interaction between the main component.(if any)
(5) Name and version No of software to be installed and Quality Assurance Plan(if any)
(6) Installation and operation manual(if necessary)
(7) marking methods

3. When the alteration of the specification, construction, etc. is to be made on the machinery and equipment which have been granted the design approval, the manufacturer is to submit the application of alteration to the Society together with the detailed drawings and documents of the alteration.

103. Approval assessment

1. The machinery and equipment specified in **101. 1** are to be assessed in accordance with the corresponding requirements in the Rules and the Guidance relating to the Rules for the Classification of Steel Ships. And, in particular, the reliability and the endurability are to be investigated considering the existing damages, etc., on the same or similar type.
2. The machinery and equipment approved in accordance with **101. 2** are to be assessed by applying the corresponding requirements in the Rules and the Guidance relating to the Rules for the Classification of Steel Ship.
3. The assessment of Certificates issued by other Classification Society or an inspection organization recognized by the Society may be partially or wholly omitted. However, for this, the drawings and documents related to approval by other Classification Society or an inspection organization are to be submitted.

104. Notification and announcement of approval

1. The Society is to issue a Design Approval Certificate such as **FORM AC-3** shown on **Annex 3** to the applicant, where deemed appropriate by the Society on the basis of the submitted drawings and documents after completion of the approval assessment.
2. The Society announces the manufacturers who have been granted the design approval in the booklet of "List of Approved Manufacturer & Type Approved Equipment".

105. Validity and renewal of approval certificate

1. The design approval certificate will be valid within five years from the date of issue
2. The manufacturer who intends to have a continuation of the approval is to submit an application to the Society three months before the expiry date together with the contents of alteration if there is any alteration to the design.
3. At the request of the manufacturer, the Society may extend the validity of approval certificate within the period of three months after expiry of the validity. In this case, the renewed approval certificate will be valid within five years from the expiry date of old approval certificate.

106. Suspension or withdrawal of approval

1. The Society can withdraw the design approval, in case any of the following cases.
   (1) When the machinery and equipment no longer conform to the given requirements due to amendments or establishment of conventions, laws, rules and regulations.
   (2) When serious shortcomings are found in structure or quality of the machinery and equipment already approved after being installed in ships.
   (3) When a request for withdrawal is made by the manufacturer.
   (4) When the approval fees are not paid.
   (5) When request for renewal of certificate is not made by the manufacturer.
   (6) When considered inappropriate for approved condition by the Society.
2. When necessary conduct occasional audit, where non-conformities in the approved quality system are found, or where conditions for the issuance of the certificate or for its maintenance have deteriorated, the manufacturer is to correct the non-conformities. Such corrections are to be verified by the Society. In case corrective actions are not taken within the specified period, the Society may suspend the approved certificate for a given period. In case the corrective actions are not taken for the suspended period, the Society may withdraw the approval.
3. A manufacturer whose approval has been withdrawn, may apply for re-approval provided that the reasons which resulted in cancellation are corrected, and the Society is to issue the approval certificate after it is confirmed that the corrective action has effectively been implemented.
4. Where an application for re-approval is made for product which had its design approval withdrawn, such application shall be handled according to initial design approval requirements. But, it may be considered as exceptional case in case where the Society specially accepted.

107. Handling after approval

In case the machinery and equipment obtained design approval, the manufacturers may submit a copy of design approval certificate instead of the drawings and documents required by the Rules to the Society at the application of manufacturing survey.

Section 2 Loading Instrument Program

201. Application

1. The requirements of this Section, under approval application, can apply to tests and inspection for the design approval of program (software) to be used for the loading instruments for stability calculation installed in ships according to **Pt 1, Ch 1, 307.** and **405.** of Rules and for loading instrument for longitudinal strength calculation installed in ships according to **Pt 3, Ch 3, 104.** of the Rules.

2. The approval of program is to be carried out for stability calculation and longitudinal strength or for each.

3. The program approval for stability calculation is to be carried out for intact, grain and damage stability or for each.

4. The requirements in this Section also can apply to the loading instrument program intended for use on shore to calculate several different ships under approval application.

202. Data to be submitted

The following data are to be submitted to the Society in addition to those specified in **102.**

(1) The type (or particulars) of applicable loading instrument

(2) Specification of program including kind of use (longitudinal strength, intact stability, damage stability, etc.) and program logic or flow diagram defining calculation process

(3) User's manual of program *(2017)*

(4) The output of program provided from data of model ships assigned by the Society for the purpose of test

203. Requirements

1. System

(1) In principle, loading condition of cargo holds, all tanks comprising part of hull structure and independent tanks are to be able to be input individually.

(2) Input data are to be able to be conformed.

(3) The program is to be capable of printing the calculated results and the items needing review are to be shown.

(4) The input/output form of the instrument and screen presentation are to be similar to the data of longitudinal strength calculation and stability so that the operators will easily gain familiarity with use of relevant data.

(5) The program is to have graphic function in order to confirm the hull form.

(6) Safety action for doubling loading of container at the same location such as container or overloading at tank is to be provided.

(7) The system of each program is to be capable of carrying out all calculation by using a linear definition and of preventing mixing of data with data of other programs.

(8) Where software has been developed to carry out only intact stability calculation, a hull form definition may not form the basis of the calculation procedure.

(9) In all cases where software has been developed to additionally carry out damage stability calculations, a hull form definition is to form the basis of the calculation. Alternatively, where damage stability limiting KG/GM data is utilized, the software is to contain sufficient data such that compliance with the relevant damage stability regulations is accurately determined for the vessel in any possible loading condition.

(10) Automatic assessment by the software of the results of the calculations against all criteria is considered essential since assessment by the operator could introduce error and when error of basic condition occurs, alarm is to be indicated.

(11) The test loading conditions are to be permanently stored in computer memory such that accidental alteration or deletion by the user or deletion by power surge/failure, is impossible.

(12) Compliance with related requirement is to be confirmed before deciding acceptance of loading condition.

(13) Code, limited value required by Administration or Classification Rules, minimum value, etc. (for instance, maximum permissible inclining in damaged condition, minimum GZ in intact condition, maximum allowable shearing force, bending moment, torsional moment, etc.) are to be reflected.

2. Longitudinal strength calculation program

(1) At least the following items are to be output.
  (A) Displacement
  (B) Draughts and trim
  (C) Still water shearing force (for ships with longitudinal bulkheads, respective shearing forces acting on the longitudinal bulkheads and shell plating in consideration of local loads)
  (D) Still water longitudinal bending moment
(2) In principle, still water shearing forces and longitudinal bending moments at the forward end transverse bulkheads of the machinery space or cargo pump room, collision bulkhead and transverse bulkheads located between them are to be output.
(3) In principle, longitudinal still water bending moment is to show the maximum values of hogging/sagging moment. However, when maximum values of these have sufficient accuracy, it need not meet this requirement.
(4) The instrument is to be checked easily in the standard loading conditions.
(5) The calculated values of still water shearing force and longitudinal bending moment at each loading condition are to be compared easily with the still water shearing force specified in loading manual of the ship at calculating location or allowable longitudinal still water bending moment.

3. Stability calculation program

The system is to comply with the following requirements.

(1) The numerical/graphic indications of calculation results such as calculation of mass and moment, GM, GZ, area below GZ curve and range of GZ are demonstrated.
(2) The function which may decide compliance of all applicable requirements such as intact, grain and/or damage stability and minimize work and analysis of the operator is to be provided.
(3) If applicable, damage stability is to be calculated by displacement constant method (bouyancy loss method) and the function which may evaluate damage stability at middle stage of flooding is to be provided.
(4) If there exist applicable requirements not reviewed by instrument, proper measure is to be taken to the operator to recognize that such requirements are to be reviewed by other methods.
(5) Software and supporting data are to be clear and easy for use.
(6) The final test conditions and results of approval test are to be reflected.
(7) All pre-programmed data for applicable ship are to be stored as to avoid accidental alteration or deletion by the user or deletion by power surge/failure.

4. User's manual *(2017)*

(1) The operating manual for all longitudinal strength and/or stability calculation is to be included.
(2) The user's manual is to be reviewed in accordance with **Part 1**, **Annex 2-10**, **4.** of the Guidance and found satisfactory. *(2017)*

204. Tests and inspection

1. Confirmation for accuracy of longitudinal strength calculation program

After confirming that the input & output satisfy the requirements specified in **203. 1** and **2** and the values of still water shearing force and longitudinal bending moment calculated by the Society are to be compared with those obtained by the instrument in proper loading conditions. In this case, the number of loading conditions employed are to be at least four and the error is to be less than ±10 % respectively. Also, in case that the values of still water shearing force and longitudinal bending moment obtained by the instrument are within ± 3 % of the respective values calculated with the method approved by the Society, the comparison may be omitted when the values are deemed adequate by the Society. However, the calculation accuracy may be reasonably considered at points where the absolute values of still water shearing force and longitudinal bending moment are especially small.

2. Stability program

(1) Accuracy between test conditions and output results of stability is to be confirmed.
(2) If applicable, the number and definition of damage cases pre-programmed in software are to be considered adequate in demonstrating compliance with the relevant International Code/Convention or National requirement in any cargo loading condition.
(3) Technical content and format of supporting documentation are to be satisfied.

(4) Results of sensitive test for one or more model ships (carried out by alteration of section modulus used for hull form definition) are to be confirmed.
(5) Saved requirements are to be compared with calculated results.

205. Change of approved program

All changes to the software are to be made by the designer or his representative and the Society informed immediately, since such changes invalidate any certificate issued. The Society may make additional calculations and comparison of results, if necessary.

Section 3 Container Lashing calculation program

301. General

1. The requirements of this Section, under approval application, can apply to tests and inspection for the design approval of program(software) to be used for the lashing calculation instruments installed in ships according to **Pt 7, Appendix 7-2, 9 (1) (D) of the Guidance Relating to the Rules for the Classification of Steel Ships**.

2. For the design approval of container lashing calculation program, the review and acceptance of design is necessary for two sample ships at least according to typical test condition of Test report of **Pt 7, Appendix 7-2, 9 (2) (C) (c) of the Guidance Relating to the Rules for the Classification of Steel Ships**.

302. Documentation to submit

The manufacturers wishing to obtain design approval are to submit a copy of the application of design approval and three copies specified in **Pt 7, Appendix 7-2, 9 (2) of the Guidance Relating to the Rules for the Classification of Steel Ships.** It is to be contained information of the sample ships but not needs to contain information of specific ship such as **Pt 7, Appendix 7-2, 9 (2) (B) (a) of the Guidance Relating to the Rules for the Classification of Steel Ships** in these documentation.

303. Requirements

The design requirements are specified in **Pt 7, Appendix 7-2, 9 (3) of the Guidance Relating to the Rules for the Classification of Steel Ships**.

304. Approval

1. The acceptable criteria of the calculation results of the program are specified in **Pt 7, Appendix 7-2, 9 (4) of the Guidance Relating to the Rules for the Classification of Steel Ships**.

2. The general approval procedure are accordance with **Sec 1** not specified in this section.

3. All changes to the program are to be made by the designer and the Society informed immediately, since such changes invalidate any certificate issued and the certificates shall be re-issued for the changes by the Society. ⚓

CHAPTER 5 APPROVAL OF QUALITY ASSURANCE SYSTEM

Section 1 General

101. Application

1. The requirements of this Chapter apply to the procedures for the approval of quality assurance system to carry out the plant audit and to evaluate the capability of a quality assurance of the manufacturer of equipment and materials for use in ships in accordance with the requirements in **Pt 2, Ch 1, 104.** (4), **Pt 5, Ch 1, 305.** and **Pt 6, Ch 1, 103.** of the Rules and other Technical Rules.

2. The manufacturers wishing to obtain the approval of quality assurance system are comply with the requirements specified in the relevant chapter in this Guidance according to the kind of equipment and materials in addition to the requirements in this Chapter.

3. The manufacturers wishing to obtain the approval of the Society for items other than those in **Par 1** above are to comply with the requirements of this Chapter.

4. The manufacturers wishing to obtain the approval of the Society for their machining, construction and/or repair process, etc. are to comply with the requirements of this Chapter.

102. Kind of QA system

1. Fully entrusted QA system(QA Type F)

(1) This system is to entrust our full attending survey.
(2) Generally, the object of QA Type F are mass produced-machinery or materials company which maintains ISO 9001 certification, low level nonconforming product rate and high reliability. Examples for product are high speed diesel engine, steel plates.
(3) The approved manufacturer shall stamp KRQ punch on equipment and materials which are passed KR-QA System Maintain Procedure on behalf of KR surveyor.

2. Partial entrusted QA system(QA Type P)

(1) This system is to entrust our partial attending survey.
(2) Generally intermediate survey is omitted and partial main inspection item and/or final survey shall be carried out with attending.
(3) General, the object of QA Type P are materials and equipment manufacturers(ex.: propeller, boiler, main engine for marine vessel) which are producing product with a various kinds of small quantity or product on demand and which maintain ISO 9001, lower ratio of inferior goods and have high reliability of product or items for which ship owners or customers tend to attend the test practically.
(4) QA Type P equipment and materials shall be stamped KR punch by KR surveyor while attending final inspection.

3. KR surveyor may attend tests, inspections and issue the relative material certificates in case of founding quality defect or upon request of ship owner or customer even though it is Full or Partial QA approved item.

103. Approval application

1. The manufacturers wishing to the approval of quality assurance system are to submit a copy of the application of approval of quality assurance system (refer to **Annex 6**) together with following data in **Par 2** to the Society.

2. Data to be submitted

(1) Approval documents : Procedure for maintaining KR Quality Assurance System : 3 copies
  (a) Scope : Manufacturer's factories and products to be approved by KR QA System, permission range of manufacturer's self-inspection from KR
  (b) Responsibility and authority : Person in charge of manufacturing survey and personnel(Quality, Production etc.) relating with KR QA System [Department, Title, Name,

Works(control of KR Rules and punch and verification of inspection report) relating with KR QA System etc.]

(c) Relevant Document: List of quality control documents including inspection criteria to comply with KR Rule requirement and/or the list of suppliers or sub-contractors for components and/or materials

(d) Procedure for preparing Product Certificate on behalf of KR (If applicable);
- Issue and Signature of Inspection Certificate
- reporting to KR office

(e) Product marking method

(f) Control of KR punch (If applicable)

(g) Verification of inspection report/Identification and traceability of products according to permission of manufacturer's tests and inspection)

(h) Inspection and test plan

(2) Reference

(a) Quality manual : 2 copies

(b) Other data deemed necessary by the Society for the approval of quality assurance system

3. The manufacturers wishing to obtain the approval of the Society for items not specified in this Guidance or for machining, construction and/or repair process, etc. are to submit each 3 copies of following data additionally to the Society.

(1) Outline of the products to which the quality assurance system is applied (product name, range of application for approval, etc.)

(2) Outline of the machining, construction and/or repair process, etc. to which the quality assurance system is applied, Applicable codes, etc.

Section 2 Assessment

201. Documentation assessment

In the documentation assessment, the data submitted under the requirements in **2.** of **103.** above are investigated to confirm that the documented quality system is in conformity with **401.** and **402.** below.

202. Plant audit

1. Upon satisfactory outcome of the assessment of the documentation, a visit is made to evaluate the Manufacturing survey arrangement and to verify that the manufacturer's quality assurance system is to be in conformity with **401.** and **402.** below.

2. When parts of products are produced by subcontractors, the Society may request the audit of their facilities to assess the manufacturing process and quality control at their location.

3. When an external person takes part in the manufacturing process relating to quality of products at works, the Society may request the audit of that person.

4. When deficiencies in the quality assurance system are found, the manufacturer is to be informed by documentation, and after the corrective action of the deficiencies is taken by the manufacturer, the Surveyor's revisit may be made to evaluate the validity of the corrective action.

203. Periodical audit

1. Periodical audit is to be carried out to the manufacturer's workshop annually within 3 months before and after the anniversary date to confirm that the approved quality system, etc. of the works are maintained satisfactorily. However, the periodical audit may be performed with a shorter interval than that above, where deemed necessary by the Society.

2. Periodical audit is to be carried out in accordance with **201.** and **202.** above.

3. When deficiencies in the quality assurance system are found, it is to be in accordance with **202. 4** above.

204. Renewal audit

1. When the valid term of the approval certificate is expired, if the manufacturer intends renewal of the approval, renewal audit is to be carried out to the manufacturer's workshop in accordance with **201.** and **202.** above.

2. Where deemed acceptable, a part of data to be submitted and audit may be reduced.

3. When deficiencies in the quality assurance system are found, it is to be in accordance with **202. 4** above.

205. Occasional audit

1. The Society may request the occasional audit if any of the following condition happens:

(1) Important changes of approved quality system

(2) Products to be approved are changed or added (However, where the manufacturer obtained other approval specified in the relevant chapter in this Guidance in addition to the approval of quality assurance system, occasional audit may substitute for conforming the change or addition during the next periodical audit or renewal audit)

(3) Where problem in the quality of the approved product is reported.

2. In the occasional audit, it is to be confirmed by the Society that all the necessary requirement are in a satisfactory condition.

3. When deficiencies in the quality assurance system are found, it is to be in accordance with **202. 4** above.

Section 3 Approval

301. Notification and announcement of approval

1. After satisfactory completion of the documentation assessment and plant audit in **201.** and **202.** above, the Society is to issue the Approval Certificate for Quality Assurance System such as FORM AC-4 in **Annex 4** and send it to the applicant.

2. The Society announces the manufacturers who have been granted quality assurance system certification in the "List of Approved Manufacturer & Type Approved Equipment" containing the types of products and the main conditions of approval.

302. Validity of the certificate

1. The Approval Certificate for Quality Assurance System will be valid for three years from the date of issue. In case where the approval certificate is reissued in accordance with the requirements specified in the preceding **205.**, the expiration date will not be changed.

2. This approval maintains its validity under the acceptance of periodical audit in **203.** above.

3. The manufacturer who intends to have a continuation of the approval is to submit an application to the Society three months before the due date together with the contents of the alteration if there is any alteration to the manufacturing facilities and to the quality assurance systems.

4. Where for operational reasons, the renewal audit falls outside the period of approval, the manufacturer will still be considered as approved if agreement to this audit date is made within the period of three months after expiry of the validity, in this instance if successful, the extension of approval will be back dated to the original renewal date.

303. Suspension and withdrawal of certification

1. When non-conformities in the approved quality assurance system are found, or when conditions for the issuing of the certificate or those for its maintenance have deteriorated, the manufacturer is to correct the non-conformities. Such corrections are to be verified by the Society. In case corrective actions are not taken within the specified period, the Society may suspend the approved certificate for a given period. In case the corrective actions are not taken for the suspended period, the Society may withdraw the approval of quality assurance system.

2. The Society can withdraw the approval of a quality assurance system if any of the following conditions happens:
   (1) When important changes having significant effect on the quality system is not communicated to the Society.
   (2) When the periodical, occasional or renewal audit is not carried out in the relevant period.
   (3) When a request for withdrawal is made by the manufacturer.
   (4) When the approval fees are not paid.
   (5) When considered inappropriate for approved condition by the Society.

3. When the approval is withdrawn, the manufacturer is to return the acceptance marking seal(KRQ) to the Society.

4. A manufacturer whose approval has been withdrawn, may apply for re-approval provided that the reasons which resulted in cancellation are corrected, and the Society is to issue the approval certificate after it is confirmed that the corrective action has effectively been implemented.

5. Where an application for re-approval is made for product which had its quality assurance system approval withdrawn, such application shall be handled according to initial quality assurance system approval requirements. But, it may be considered as exceptional case in case where the Society specially accepted.

304. Change in the quality assurance system

1. In case of any change of the company organization, the quality manual, etc. having effect on the

quality system, it is to be promptly communicated by the manufacturer to the Society. Especially, important changes having significant effect on the approved quality system is as follows:

(1) Overall alteration or abolition of the quality manual, etc.
(2) Alteration of major management (owner, director's committee, etc.)
(3) Alteration of organization (consolidation of the quality system, etc.)
(4) Alteration, abolition and transfer of the manufacturing process(machining, construction, etc.), major facilities and manufacturing survey arrangement defined in quality manual

305. Handling after approval (permission of manufacturer's tests and inspection)

1. The manufacturer's tests and inspections in accordance with the approved quality assurance system granted by the Society may be allowed partially or wholly.

2. The person in charge of manufacturing survey is to be qualified and to have experience to the Society's satisfaction, to manage the manufacturing survey arrangement, to survey, to make records and to control the acceptance marking seal provided by the Society, and not to be affected for quality control by the managements. The experience of the person in charge of the manufacturing survey arrangement is to be not less than one year as a person in charge of quality control at the works and the person is recommended to complete the quality education course of the Society or equivalent.

3. The person in charge of manufacturing survey is to carry out the tests and inspections according to the approved manufacturing survey arrangement, and mark the accepted products with the descriptions given and the seal(KRQ) provided by the Society. However, for products where marking on them is difficult such as fire protection materials, welding materials, etc., they may be marked with the mark of approval by the Society at a suitable position on them or their packing materials.

4. The person in charge of manufacturing survey is to submit the reports, recorded manufacturing number, final test date, major description, test results, etc., and approval certificate, made on his own, to the Society. When satisfactory with the submitted reports and certificate, the Society give the certificate to the manufacturer after stamping the endorsement seal. However, for the products whose inspection is not required after approval, such as fire protection materials, welding materials, etc., the submission of their reports and certificate is exempted.

5. Regardless of the survey delegation, the Society may directly issue the product certificate upon witnessing of the test in case one of the followings is concerned.

(1) The customer especially requests

(2) There is any problem with the quality of certified products

6. **Confirmation survey** : confirmation survey should be carried out at least once in a year according to the Procedure for maintaining KR Quality Assurance System.

Section 4 Requirements of Quality Assurance System (KS Q ISO 9001:2009 / ISO 9001:2008)

401. General requirements

1. The manufacturers wishing to obtain the approval of quality assurance system are to comply with the requirements of this Section which based on the requirements of **KS Q ISO 9001:2009 / ISO 9001 : 2008.**

2. Where deemed appropriate by the Society, equivalent other than the requirements in this Section may be considered satisfactory to this Section.

3. The manufacturers intending to apply for the requirement in **Par 2** above, in advance, are to inform the Society.

4. Quality management system

(1) General requirements

(A) The manufacturer shall establish, document, implement and maintain a quality management system and continually improve its effectiveness in accordance with the requirements of this Section

(B) The manufacturer shall

(a) determine the processes needed for the quality management system and their application throughout the organization,

(b) determine the sequence and interaction of these processes,

(c) determine criteria and methods needed to ensure that both the operation and control of these processes are effective,

(d) ensure the availability of resources and information necessary to support the operation and monitoring of these processes,

(e) monitor, measure where applicable, and analyse these processes, and

(f) implement actions necessary to achieve planned results and continual improvement of these processes.

Processes needed for the quality management system referred to above include processes for management activities, provision of resources, product realization, measurement, analysis and improvement.

(C) These processes shall be managed by the manufacturer in accordance with the requirements of this Section.

(D) Where a manufacturer chooses to outsource any process that affects product conformity to requirements, the manufacturer shall ensure control over such processes. The type and extent of control to be applied to these outsourced processes shall be defined within the quality management system.

(2) Documentation requirements

(A) **General**

The quality management system documentation shall include

(a) documented statements of a quality policy and quality objectives,

(b) a quality manual,

(c) documented procedures and records required by this Section,

(d) documents, including records, determined by the manufacturer to be necessary to ensure the effective planning, operation and control of its processes.

Where the term "documented procedure" appears within this Section, this means that the procedure is established, documented, implemented and maintained. A single document may address the requirements for one or more procedures. and a requirement for a documented procedure may be covered by more than one document. and the extent of the quality management system documentation can differ from one organization to another due to

- the size of organization and type of activities,
- the complexity of processes and their interactions, and
- the competence of personnel.

A requirement for a documented procedure may be covered by more than one document.

(B) **Quality manual**

The manufacturer shall establish and maintain a quality manual that includes

(a) the scope of the quality management system, including details of and justification for any exclusions

(b) the documented procedures established for the quality management system, or reference to them, and
(c) a description of the interaction between the processes of the quality management system.

(C) **Control of documents**

Documents required by the quality management system shall be controlled. Records are a special type of document and shall be controlled according to the requirements given in (D). A documented procedure shall be established to define the controls needed
(a) to approve documents for adequacy prior to issue,
(b) to review and update as necessary and re-approve documents,
(c) to ensure that changes and the current revision status of documents are identified,
(d) to ensure that relevant versions of applicable documents are available at points of use,
(e) to ensure that documents remain legible and readily identifiable,
(f) to ensure that documents of external origin determined by the organization to be necessary for the planning and operation of the quality management system are identified and their distribution controlled, and
(g) to prevent the unintended use of obsolete documents, and to apply suitable identification to them if they are retained for any purpose.

(D) **Control of records**

(a) Records established to provide evidence of conformity to requirements and of the effective operation of the quality management system shall be controlled. Records shall remain legible, readily identifiable and retrievable.
(b) A documented procedure shall be established to define the controls needed for the identification, storage, protection, retrieval, retention time and disposition of records.

5. Management responsibility

(1) **Management commitment**

Top management shall provide evidence of its commitment to the development and implementation of the quality management system and continually improving its effectiveness by
(A) communicating to the organization the importance of meeting customer as well as statutory and regulatory requirements,
(B) establishing the quality policy,
(C) ensuring that quality objectives are established,
(D) conducting management reviews, and
(E) ensuring the availability of resources.

(2) **Customer focus**

Top management shall ensure that customer requirements are determined and are met with the aim of enhancing customer satisfaction

(3) **Quality policy**

Top management shall ensure that the quality policy
(A) is appropriate to the purpose of the organization,
(B) includes a commitment to comply with requirements and continually improve the effectiveness of the quality management system,
(C) provides a framework for establishing and reviewing quality objectives,
(D) is communicated and understood within the organization, and
(E) is reviewed for continuing suitability.

(4) **Planning**

(A) Quality objectives

Top management shall ensure that quality objectives, including those needed to meet requirements for product are established at relevant functions and levels within the organization. The quality objectives shall be measurable and consistent with the quality policy.

(B) Quality management system planning

Top management shall ensure that
(a) the planning of the quality management system is carried out in order to meet the requirements given in **4.** (1), as well as the quality objectives, and
(b) the integrity of the quality management system is maintained when changes to the quality management system are planned and implemented.

(5) **Responsibility, authority and communication**

(A) **Responsibility and authority**

Top management shall ensure that responsibilities and authorities are defined and communi-

cated within the organization.

(B) **Management representative**

Top management shall appoint a member of management who, irrespective of other responsibilities, shall have responsibility and authority that includes

(a) ensuring that processes needed for the quality management system are established, implemented and maintained,

(b) reporting to top management on the performance of the quality management system and any need for improvement, and

(c) ensuring the promotion of awareness of customer requirements throughout the organization.

(d) The responsibility of a management representative can include liaison with external parties on matters relating to the quality management system.

(C) **Internal communication**

Top management shall ensure that appropriate communication processes are established within the organization and that communication takes place regarding the effectiveness of the quality management system.

(6) **Management review**

(A) **General**

Top management shall review the organization's quality management system, at planned intervals, to ensure its continuing suitability, adequacy and effectiveness. This review shall include assessing opportunities for improvement and the need for changes to the quality management system, including the quality policy and quality objectives. Records from management reviews shall be maintained.

(B) **Review input**

The input to management review shall include information on

(a) results of audits,

(b) customer feedback,

(c) process performance and product conformity,

(d) status of preventive and corrective actions,

(e) follow-up actions from previous management reviews,

(f) changes that could affect the quality management system, and

(g) recommendations for improvement.

(C) **Review output**

The output from the management review shall include any decisions and actions related to

(a) improvement of the effectiveness of the quality management system and its processes,

(b) improvement of product related to customer requirements, and

(c) resource needs.

6. Resource management

(1) **Provision of resources**

The manufacturer shall determine and provide the resources needed

(A) to implement and maintain the quality management system and continually improve its effectiveness, and

(B) to enhance customer satisfaction by meeting customer requirements.

(2) **Human resources**

(A) **General**

Personnel performing work affecting conformity to product requirements shall be competent on the basis of appropriate education, training, skills and experience.

(B) **Competence, training and awareness**

The manufacturer shall

(a) determine the necessary competence for personnel performing work affecting conformity to product requirements,

(b) where applicable, provide training or take other actions to achieve the necessary competence.

(c) evaluate the effectiveness of the actions taken,

(d) ensure that its personnel are aware of the relevance and importance of their activities and how they contribute to the achievement of the quality objectives,

(e) maintain appropriate records of education, training, skills and experience.

(C) **Infrastructure**

The manufacturer shall determine, provide and maintain the infrastructure needed to achieve conformity to product requirements. Infrastructure includes, as applicable

(a) buildings, workspace and associated utilities,

(b) process equipment (both hardware and software), and

(c) supporting services (such as transport or communication or information systems).

(D) **Work environment**

The manufacturer shall determine and manage the work environment needed to achieve conformity to product requirements.

7. Product realization

(1) **Planning of product realization**

The manufacturer shall plan and develop the processes needed for product realization. Planning of product realization shall be consistent with the requirements of the other processes of the quality management system. In planning product realization, the manufacturer shall determine the following, as appropriate:

(A) quality objectives and requirements for the product;

(B) the need to establish processes and documents, and to provide resources specific to the product;

(C) required verification, validation, monitoring, measurement, inspection and test activities specific to the product and the criteria for product acceptance;

(D) records needed to provide evidence that the realization processes and resulting product meet requirements.

(2) **Customer-related processes**

(A) **Determination of requirements related to the product**

The manufacturer shall determine

(a) requirements specified by the customer, including the requirements for delivery and post-delivery activities,

(b) requirements not stated by the customer but necessary for specified or intended use, where known,

(c) statutory and regulatory requirements applicable to the product, and

(d) any additional requirements considered necessary by the manufacturer.

(B) **Review of requirements related to the product**

(a) The manufacturer shall review the requirements related to the product. This review shall be conducted prior to the manufacturer's commitment to supply a product to the customer (e.g. submission of tenders, acceptance of contracts or orders, acceptance of changes to contracts or orders) and shall ensure that

(i) product requirements are defined,

(ii) contract or order requirements differing from those previously expressed are resolved, and

(iii)the manufacturer has the ability to meet the defined requirements.

And records of the results of the review and actions arising form the view shall be maintained. In some situations, such as internet sales, a formal review is impractical for each order. Instead the review can cover relevant product information such as catalogues or advertising material. Records of the results of the review and actions arising from the review shall be maintained.

(b) Where the customer provides no documented statement of requirement, the customer requirements shall be confirmed by the manufacturer before acceptance.

(c) Where product requirements are changed, the manufacturer shall ensure that relevant documents are amended and that relevant personnel are made aware of the changed requirements.

(C) **Customer communication**

The manufacturer shall determine and implement effective arrangements for communicating with customers in relation to

(a) product information,

(b) enquiries, contracts or order handling, including amendments, and

(c) customer feedback, including customer complaints.

(3) **Design and development**

(A) **Design and development planning**

(a) The manufacturer shall plan and control the design and development of product.
(b) During the design and development planning, the manufacturer shall determine
(i) the design and development stages,
(ii) the review, verification and validation that are appropriate to each design and development stage, and
(iii) the responsibilities and authorities for design and development.
(c) The manufacturer shall manage the interfaces between different groups involved in design and development to ensure effective communication and clear assignment of responsibility.
(d) Planning output shall be updated, as appropriate, as the design and development progresses.

(B) **Design and development inputs**
(a) Inputs relating to product requirements shall be determined and records maintained (see **4.** (2) (D)) These inputs shall include
(i) functional and performance requirements,
(ii) applicable statutory and regulatory requirements,
(iii) where applicable, information derived from previous similar designs, and
(iv) other requirements essential for design and development.
(b) These inputs shall be reviewed for adequacy. Requirements shall be complete, unambiguous and not in conflict with each other.

(C) **Design and development outputs**
(a) The outputs of design and development shall be provided in a form that enables verification against the design and development input and shall be approved prior to release.
(b) Design and development outputs shall
(i) meet the input requirements for design and development,
(ii) provide appropriate information for purchasing, production and for service provision,
(iii) contain or reference product acceptance criteria, and
(iv) specify the characteristics of the product that are essential for its safe and proper use.

(D) **Design and development review**
(a) At suitable stages, systematic reviews of design and development shall be performed in accordance with planned arrangements.
(i) to evaluate the ability of the results of design and development to meet requirements, and
(ii) to identify any problems and propose necessary actions.
(b) Participants in such reviews shall include representatives of functions concerned with the design and development stage(s) being reviewed. Records of the results of the reviews and any necessary actions shall be maintained.

(E) **Design and development verification**
Verification shall be performed in accordance with planned arrangements to ensure that the design and development outputs have met the design and development input requirements. Records of the results of the verification and any necessary actions shall be maintained.

(F) **Design and development validation**
Design and development validation shall be performed in accordance with planned arrangements to ensure that the resulting product is capable of meeting the requirements for the specified application or intended use, where known. Wherever practicable, validation shall be completed prior to the delivery or implementation of the product. Records of the results of validation and any necessary actions shall be maintained.

(G) C**ontrol of design and development changes**
Design and development changes shall be identified and records maintained. The changes shall be reviewed, verified and validated, as appropriate, and approved before implementation. The review of design and development changes shall include evaluation of the effect of the changes on constituent parts and product already delivered. Records of the results of the review of changes and any necessary actions shall be maintained.

(4) **Purchasing**

(A) **Purchasing process**
(a) The manufacturer shall ensure that purchased product conforms to specified purchase requirements. The type and extent of control applied to the supplier and the purchased

product shall be dependent upon the effect of the purchased product on subsequent product realization or the final product.

(b) The manufacturer shall evaluate and select suppliers based on their ability to supply product in accordance with the manufacturer's requirements. Criteria for selection, evaluation and re-evaluation shall be established. Records of the results of evaluations and any necessary actions arising from the evaluation shall be maintained.

(B) **Purchasing information**

(a) Purchasing information shall describe the product to be purchased, including where appropriate

(i) requirements for approval of product, procedures, processes and equipment,

(ii) requirements for qualification of personnel, and

(iii) quality management system requirements.

(b) The manufacturer shall ensure the adequacy of specified purchase requirements prior to their communication to the supplier.

(C) **Verification of purchased product**

(a) The manufacturer shall establish and implement the inspection or other activities necessary for ensuring that purchased product meets specified purchase requirements.

(b) Where the manufacturer or its customer intends to perform verification at the supplier's premises, the manufacturer shall state the intended verification arrangements and method of product release in the purchasing information.

(5) **Production and service provision**

(A) **Control of production and service provision**

The manufacturer shall plan and carry out production and service provision under controlled conditions. Controlled conditions shall include, as applicable

(a) the availability of information that describes the characteristics of the product,

(b) the availability of work instructions, as necessary,

(c) the use of suitable equipment,

(d) the availability and use of monitoring and measuring equipment,

(e) the implementation of monitoring and measurement, and

(f) the implementation of product release, delivery and post-delivery activities.

(B) **Validation of processes for production and service provision**

(a) The manufacturer shall validate any processes for production and service provision where the resulting output cannot be verified by subsequent monitoring or measurement. This includes any processes where deficiencies become apparent only after the product is in use or the service has been delivered.

(b) Validation shall demonstrate the ability of these processes to achieve planned results.

(c) The manufacturer shall establish arrangements for these processes including, as applicable

(i) defined criteria for review and approval of the processes,

(ii) approval of equipment and qualification of personnel,

(iii) use of specific methods and procedures,

(iv) requirements for records (see **4** (2) (D)), and

(v) revalidation.

(C) **Identification and traceability**

(a) Where appropriate, the manufacturer shall identify the product by suitable means throughout product realization.

(b) The manufacturer shall identify the product status with respect to monitoring and measurement requirements throughout product realization.

(c) Where traceability is a requirement, the manufacturer shall control the unique identification of the product and maintain records.

(D) **Customer property**

The manufacturer shall exercise care with customer property while it is under the manufacturer's control or being used by the manufacturer. The manufacturer shall identify, verify, protect and safeguard customer property provided for use or incorporation into the product. If any customer property is lost, damaged or otherwise found to be unsuitable for use, this shall be reported to the customer and records maintained.

(E) **Preservation of product**

The manufacturer shall preserve the product during internal processing and delivery to the intended destination in order to maintain conformity to requirements. As applicable, preservation shall include identification, handling, packaging, storage and protection. Preservation

shall also apply to the constituent parts of a product.

(6) **Control of monitoring and measuring devices**

(A) The manufacturer shall determine the monitoring and measurement to be undertaken and the monitoring and measuring equipment needed to provide evidence of conformity of product to determined requirements.

(B) The manufacturer shall establish processes to ensure that monitoring and measurement can be carried out and are carried out in a manner that is consistent with the monitoring and measurement requirements.

(C) Where necessary to ensure valid results, measuring equipment shall

(a) be calibrated or verified, or both, at specified intervals, or prior to use, against measurement standards traceable to international or national measurement standards; where no such standards exist, the basis used for calibration or verification shall be recorded;

(b) be adjusted or re-adjusted as necessary;

(c) have identification in order to determine its calibration status;

(d) be safeguarded from adjustments that would invalidate the measurement result;

(e) be protected from damage and deterioration during handling, maintenance and storage.

(D) In addition, the manufacturer shall assess and record the validity of the previous measuring results when the equipment is found not to conform to requirements. The manufacturer shall take appropriate action on the equipment and any product affected. Records of the results of calibration and verification shall be maintained.

(E) When used in the monitoring and measurement of specified requirements, the ability of computer software to satisfy the intended application shall be confirmed. This shall be undertaken prior to initial use and reconfirmed as necessary.

8. Measurement, analysis and improvement

(1) **General**

(A) The manufacturer shall plan and implement the monitoring, measurement, analysis and improvement processes needed

(a) to demonstrate conformity to product requirements,

(b) to ensure conformity of the quality management system, and

(c) to continually improve the effectiveness of the quality management system.

(B) This shall include determination of applicable methods, including statistical techniques, and the extent of their use.

(2) **Monitoring and measurement**

(A) **Customer satisfaction**

As one of the measurements of the performance of the quality management system, the manufacturer shall monitor information relating to customer perception as to whether the manufacturer has met customer requirements. The methods for obtaining and using this information shall be determined.

(B) **Internal audit**

(a) The manufacturer shall conduct internal audits at planned intervals to determine whether the quality management system

(i) conforms to the planned arrangements (see **7.** (1)), to the requirements of this International Standard and to the quality management system requirements established by the manufacturer, and

(ii) is effectively implemented and maintained.

(b) An audit programme shall be planned, taking into consideration the status and importance of the processes and areas to be audited, as well as the results of previous audits. The audit criteria, scope, frequency and methods shall be defined. Selection of auditors and conduct of audits shall ensure objectivity and impartiality of the audit process.

(c) Auditors shall not audit their own work.

(d) A documented procedure shall be established to define the responsibilities and requirements for planning and conducting audits, establishing records and reporting results.

(e) Records of the audits and their results shall be maintained.

(f) The management responsible for the area being audited shall ensure that any necessary corrections and corrective actions are taken without undue delay to eliminate detected nonconformities and their causes. Follow-up activities shall include the verification of the actions taken and the reporting of verification results.

(C) **Monitoring and measurement of processes**

(a) The manufacturer shall apply suitable methods for monitoring and, where applicable, measurement of the quality management system processes.

(b) These methods shall demonstrate the ability of the processes to achieve planned results.

(c) When planned results are not achieved, correction and corrective action shall be taken, as appropriate.

(D) **Monitoring and measurement of product**

(a) The manufacturer shall monitor and measure the characteristics of the product to verify that product requirements have been met. This shall be carried out at appropriate stages of the product realization process in accordance with the planned arrangements (see **7** (1)).

(b) Evidence of conformity with the acceptance criteria shall be maintained.

(c) Records shall indicate the person(s) authorizing release of product (see **4** (2) (D)).

(d) The release of product and delivery of services to the customer shall not proceed until the planned arrangements (see **7** (1)) have been satisfactorily completed, unless otherwise approved by a relevant authority and, where applicable, by the customer.

(3) **Control of nonconforming product**

(A) The manufacturer shall ensure that product which does not conform to product requirements is identified and controlled to prevent its unintended use or delivery. The controls and related responsibilities and authorities for dealing with nonconforming product shall be defined in a documented procedure.

(B) Where applicable, the manufacturer shall deal with nonconforming product by one or more of the following ways:

(a) by taking action to eliminate the detected nonconformity;

(b) by authorizing its use, release or acceptance under concession by a relevant authority and, where applicable, by the customer;

(c) by taking action to preclude its original intended use or application.

(d) by taking action appropriate to the effects, or potential effects, of the nonconformity when nonconforming product is detected after delivery or use has started.

(C) When nonconforming product is corrected it shall be subject to re-verification to demonstrate conformity to the requirements.

(D) Records of the nature of nonconformities and any subsequent actions taken, including concessions obtained, shall be maintained.

(4) **Analysis of data**

(A) The manufacturer shall determine, collect and analyse appropriate data to demonstrate the suitability and effectiveness of the quality management system and to evaluate where continual improvement of the effectiveness of the quality management system can be made. This shall include data generated as a result of monitoring and measurement and from other relevant sources.

(B) The analysis of data shall provide information relating to

(a) customer satisfaction,

(b) conformity to product requirements,

(c) characteristics and trends of processes and products including opportunities for preventive action, and

(d) suppliers.

(5) **Improvement**

(A) **Continual improvement**

The manufacturer shall continually improve the effectiveness of the quality management system through the use of the quality policy, quality objectives, audit results, analysis of data, corrective and preventive actions and management review.

(B) **Corrective action**

(a) The manufacturer shall take action to eliminate the cause of nonconformities in order to prevent recurrence. Corrective actions shall be appropriate to the effects of the nonconformities encountered.

(b) A documented procedure shall be established to define requirements for

(i) reviewing nonconformities (including customer complaints),

(ii) determining the causes of nonconformities ,

(iii) evaluating the need for action to ensure that nonconformities do not recur,

(iv) determining and implementing action needed,

(v) records of the results of action taken (see **4** (2) (D)), and
(vi)reviewing the effectiveness of the corrective action taken.

(C) **Preventive action**

(a) The manufacturer0 shall determine action to eliminate the causes of potential non-conformities in order to prevent their occurrence. Preventive actions shall be appropriate to the effects of the potential problems.

(b) A documented procedure shall be established to define requirements for
(i) determining potential nonconformities and their causes,
(ii) evaluating the need for action to prevent occurrence of nonconformities,
(iii)determining and implementing action needed,
(iv)records of results of action taken (see **4** (2) (D)), and
(v) reviewing the effectiveness of the preventive action taken.

402. Special requirements

1. Control of approved drawings by the Society

The manufacturer is to establish and maintain documented procedures to control the approved drawings by the Society, and appoint the responsible personnel.

2. Conformity on the Rules of the Society

In purchasing incoming materials, the manufacturer is to establish and maintain the documented procedures to confirm that they meet the requirements in the Rules.

3. Identification and traceability of products possessed Society′s certificate

The manufacturer is to establish and maintain the documented procedures to confirm the relation between the products with the Society's certificate and their materials for the identification and traceability of products, if necessary.

4. Qualified personnel

Welding or NDT operators among special processes operators which requiring pre-qualification of their process capability are be qualified by the Society or by another body recognized by the Society.

5. Approval of the nonconforming products by the Society

(1) Where nonconforming products are intended to use after repair or rework, the manufacturer is to ensure that the tests or inspection for use are to be carried out in the presence of the Surveyor.

(2) Any deficiencies found on products which are approved in accordance with this Chapter are promptly to be eliminated. The manufacturer is to establish and maintain the documented procedures to communicate those affecting the ultimate quality of the products to the Society.

6. Notification of the corrective action

The procedures for corrective action are to include communication method to the Society confirming that the corrective action is carried out and that it is effective. ⚓

CHAPTER 6 MANUFACTURER APPROVAL

Section 1 General

101. Application

1. The requirements in this Chapter apply to the procedures for manufacturer approval of product (paints and fire protection materials, etc.) having no individual product inspection after type approval in accordance with the requirements in this Guidance. *(2017)*

2. Also, the requirements in this Chapter apply to the procedures of the manufacturer approval for the manufacturer who intend to issue Work's certificate(W), or for the engine manufacturer in accordance with **Pt 5** of the Rules. *(2017)*

3. The manufacturers wishing to obtain the approval of the Society for items other than those in **Par 1**, **Par 2** above are to comply with the requirements of this Chapter.

102. Approval application

1. The manufacturers wishing to obtain the Manufacturer Approval are to submit a copy of the application of the Manufacturer Approval (refer to **Annex 6**) and two copies of data in **Ch 3, 102. 3** (2) to the Society.

2. The manufacturers of paints and fire protection materials, etc. wishing to the first time plant audit for the Manufacturer Approval are subjected to be together with type approval.

3. The manufacturers wishing to the Periodical Audit and Renewal Audit of manufacturer approval are to submit a copy of the application of the Manufacturer Approval (refer to **Annex 6**) together with following data to the Society. *(2017)*

(1) Reviewed manufacturing process during previous plant audit, the specification and list of the alteration to the manufacturing facilities(where practicable, to be mentioned with a comparison table form between new and old)
(2) List of Type Approved Equipment issued by the Society
(3) The copies for test records and the date list of accuracy and calibration of inspection and testing facilities
(4) Service records to the Society
(5) For the manufacturer of equipments components, documents specified the relationship with manufacturers of final assembly

4. However, the required data previously submitted to the Society, according to the Technical Rules, may be exempted from submission.

Section 2 Assessment

201. Documentation assessment

The Society examines the data submitted under the requirements in **102.** above.

202. Plant audit

1. Upon satisfactory outcome of the assessment of the documentation, a visit is made to evaluate the Manufacturing survey arrangement and to verify that the manufacturer's quality assurance system is to be in conformity.

2. When parts of products are produced by subcontractors, the Society may request the audit of their facilities to assess the manufacturing process and quality control at their location.

3. When an external person takes part in the manufacturing process relating to quality of products at works, the Society may request the audit of that person.

4. When deficiencies in the quality assurance system are found, the manufacturer is to be informed by documentation, and after the corrective action of the deficiencies is taken by the manufacturer, the Surveyor's revisit may be made to evaluate the validity of the corrective action.

203. Periodical audit

1. Periodical audit is to be carried out to the manufacturer's workshop annually within 3 months before and after the anniversary date to confirm that the approved quality system, etc. of the works are maintained satisfactorily. However, the periodical audit may be performed with a shorter interval than that above, where deemed necessary by the Society.

2. Periodical audit is to be carried out in accordance with **201.** and **202.** above.

3. When deficiencies in the quality assurance system are found, it is to be in accordance with **202. 4** above.

204. Renewal audit

1. When the valid term of the approval certificate is expired, if the manufacturer intends renewal of the approval, renewal audit is to be carried out to the manufacturer's workshop in accordance with **201.** and **202.** above.

2. Where deemed acceptable, a part of data to be submitted and audit may be reduced.

3. When deficiencies in the quality assurance system are found, it is to be in accordance with **202. 4** above.

205. Occasional audit

1. The Society may request the occasional audit if any of the following condition happens:

(1) Important changes of approved quality system

(2) Products to be approved are changed or added (However, where the manufacturer obtained other approval specified in the relevant chapter in this Guidance in addition to Manufacturer approval, occasional audit may substitute for conforming the change or addition during the next periodical audit or renewal audit)

(3) Where problem in the quality of the approved product is reported.

2. In the occasional audit, it is to be confirmed by the Society that all the necessary requirement are in a satisfactory condition.

3. When deficiencies in the quality assurance system are found, it is to be in accordance with **202. 4** above.

Section 3 Approval

301. Notification and announcement of approval

1. After satisfactory completion of the documentation assessment and plant audit, the Society is to issue the Manufacturer Approval Certificate such as FORM AC-6A in **Annex 5** and send it to the applicant.
2. The Society announces the manufacturers who have been granted Manufacturer Approval Certification in the "List of Approved Manufacturer & Type Approved Equipment" containing the types of products and the main conditions of approval.

302. Validity of the certificate

1. The Approval Certificate for Manufacturer Approval will be valid for five years from the date of issue. In case where the approval certificate is reissued in accordance with the requirements specified in the preceding **304.**, the expiration date will not be changed.
2. This approval maintains its validity under the acceptance of periodical audit in **203.** above.
3. The manufacturer who intends to have a continuation of the approval is to submit an application to the Society three months before the due date together with the contents of the alteration if there is any alteration to the manufacturing facilities and to the quality assurance systems.
4. Where for operational reasons, the renewal audit falls outside the period of approval, the manufacturer will still be considered as approved if agreement to this audit date is made within the period of three months after expiry of the validity, in this instance if successful, the extension of approval will be back dated to the original renewal date.

303. Suspension and withdrawal of certification

1. When non-conformities are found in the periodical audit, renewal audit or occasional audit or when conditions for the issuing of the certificate or those for its maintenance have deteriorated, the manufacturer is to correct the non-conformities. Such corrections are to be verified by the Society. In case corrective actions are not taken within the specified period, the Society may suspend the approved certificate for a given period. In case the corrective actions are not taken for the suspended period, the Society may withdraw the Manufacturer Approval.
2. The Society can withdraw the Manufacturer Approval and Type Approval of products if any of the following conditions happens:
   (1) When important changes having significant effect on the quality system is not communicated to the Society.
   (2) When the periodical, occasional or renewal audit is not carried out in the relevant period.
   (3) When a request for withdrawal is made by the manufacturer.
   (4) When the approval fees are not paid.
   (5) When considered inappropriate for approved condition by the Society.
3. A manufacturer whose approval has been withdrawn, may apply for re-approval provided that the reasons which resulted in cancellation are corrected, and the Society is to issue the approval certificate after it is confirmed that the corrective action has effectively been implemented.
4. Where an application for re-approval is made for product which had its the manufacturer approval and type approval withdrawn, such application shall be handled according to initial design approval requirements. But, it may be considered as exceptional case in case where the Society specially accepted.

304. Changes in the approved contents

1. In case of any change having effect on the manufacturing process and the quality system, it is to be promptly communicated by the manufacturer to the Society. The Society may request an occasional plant audit, where deemed necessary upon reviewing the contents of alteration.

2. When the manufacturing sites (including that of subcontractor's works) were relocated, changed or added, the manufacturer is to submit the application for alteration to the Society together with the detailed documents of the alteration(where practicable, to be mentioned with a comparison table form between new and old). The Society is to carry out the plant audit for the manufacturing process and quality system by visiting. ⚓

<1. Approval Certificate for Manufacturing Process> *(2017)*

APPROVAL CERTIFICATE FOR MANUFACTURING PROCESS

Certificate No. : **Initial Approval** :

Product :

Manufacturer :

Product Description:

Approval Condition:

THIS IS TO CERTIFY that the manufacturing process for the above mentioned product has been approved in accordance with the relevant requirement of this Society's Rules and / or of the recognized standards as follows and entered in the "List of Approved Manufacturer and Type Approved Equipment".

This Certificate is valid until

(Re)Issued at on

KOREAN REGISTER OF SHIPPING

General Manager of
Marine & Ocean Equipment Team

Note : 1. This certificate will be valid subject to complying with the approval conditions described on the certificate and or on the Rules of this Society.
2. This certificate will be invalid from the expiry date aforementioned unless the extension or renewal has been granted to the applicant or the manufacturer.
3. Any significant modifications or changes in design or construction to the above product without approval from this Society will render this certificate invalid.
4. Should the specified rules, regulations or standards be amended during the validity of this certificate, the product is to be re-approved by this Society in accordance with the requirements as amended.

Form AC-2A (2011.06)

<2. Type Approval Certificate> *(2017)*

TYPE APPROVAL CERTIFICATE

Certificate No. :

Initial Approval :

Product :

Manufacturer :

Product Description :

Approval Condition :

THIS IS TO CERTIFY that the above-mentioned product has been approved in accordance with the relevant requirement of this Society's Rules and / or of the recognized standards as follows and entered in the "List of Approved Manufacturers and Type Approved Equipment".

This Certificate is valid until

(Re)Issued at on

KOREAN REGISTER OF SHIPPING

General Manager of
Marine & Ocean Equipment Team

Note : 1. This certificate will be valid subject to complying with the approval conditions described on the certificate and/or on the Rules of this Society.
2. This certificate will be invalid from the expiry date aforementioned unless the extension or renewal has been granted to the applicant or the manufacturer.
3. Any significant modifications or changes in design or construction to the above product without approval from this Society will render this certificate invalid.
4. Should the specified rules, regulations or standards be amended during the validity of this certificate, the product is to be re-approved by this Society in accordance with the requirements as amended

Form AC-2A (2011.06)

<3. Design Approval Certificate> *(2017)*

DESIGN APPROVAL CERTIFICATE

Certificate No. :

Initial Approval :

Product :

Manufacturer :

Product Description :

Approval Condition :

THIS IS TO CERTIFY that the design of the above-mentioned product has been approved in accordance with the relevant requirement of this Society's Rules and / or of the recognized standards as follows and entered in the "List of Approved Manufacturers and Type Approved Equipment".

This Certificate is valid until

(Re)Issued at on

KOREAN REGISTER OF SHIPPING

General Manager of
Marine & Ocean Equipment Team

Note : 1. This certificate will be valid subject to complying with the approval conditions described on the certificate and/or on the Rules of this Society.
2. This certificate will be invalid from the expiry date aforementioned unless the extension or renewal has been granted to the applicant or the manufacturer.
3. Any significant modifications or changes in design or construction to the above product without approval from this Society will render this certificate invalid.
4. Should the specified rules, regulations or standards be amended during the validity of this certificate, the product is to be re-approved by this Society in accordance with the requirements as amended.

Form AC-2A (2011.06)

<4. Approval Certificate for Quality Assurance System> *(2017)*

APPROVAL CERTIFICATE FOR QUALITY ASSURANCE SYSTEM

Certificate No. :

Product :

Manufacturer :

Initial Approval :

Approval Condition:

THIS IS TO CERTIFY that the Quality Assurance System of the above-mentioned company / works including production methods, inspection and testing, quality control and general standards of workmanship has been audited by this Society and that the System is found to be in compliance with the requirement of this Society's Rules and / or of the recognized standards as follows and entered in the "List of Approved Manufacturers and Type Approved Equipment".

This Certificate is valid until subject to periodical audit.

(Re)Issued at on

KOREAN REGISTER OF SHIPPING

General Manager of
Marine & Ocean Equipment Team

Note : 1. This certificate will be valid subject to complying with the approval conditions described on the certificate and/or on the Rules of this Society.
2. This certificate will be invalid from the expiry date aforementioned unless the extension or renewal has been granted to the applicant or the manufacturer.
3. Any significant modifications or changes in design or construction to the above product without approval from this Society will render this certificate invalid.
4. Should the specified rules, regulations or standards be amended during the validity of this certificate, the product is to be re-approved by this Society in accordance with the requirements as amended.

Form AC-2A (2011.06)

<5. Approval Certificate for Manufacturer> *(2017)*

APPROVAL CERTIFICATE FOR MANUFACTURER

Certificate No. :

Initial Approval :

Product :

Manufacturer :

Product Description:

Approval Condition:

THIS IS TO CERTIFY that the above-mentioned product has been approved in accordance with the relevant requirement of this Society's Rules and / or of the recognized standards as follows and entered in the "List of Approved Manufacturers and Type Approved Equipment".

This Certificate is valid until

(Re)Issued at on

KOREAN REGISTER OF SHIPPING

General Manager of
Marine & Ocean Equipment Team

Note : 1. This certificate will be valid subject to complying with the approval conditions described on the certificate and/or on the Rules of this Society.
2. This certificate will be invalid from the expiry date aforementioned unless the extension or renewal has been granted to the applicant or the manufacturer.
3. Any significant modifications or changes in design or construction to the above product without approval from this Society will render this certificate invalid.
4. Should the specified rules, regulations or standards be amended during the validity of this certificate, the product is to be re-approved by this Society in accordance with the requirements as amended.

Form AC-2A (2011.06)

<6. Application Form for Approval>

Korean Register

Application for Approval of Materials and Equipment

Work ID No.		Date of Receipt	

Applicant

Company Name			
Address			
Tel. No.		Fax. No.	
Company E-mail			
Person in Charge		Mobile No.	
		E-mail	

Factory

Company Name			
Address of Factory			
Tel. No.		Fax. No.	
Company E-mail			
Person concerned		Mobile No.	
		E-mail	

Kind of Approval

	TA	MP	DA	QA	MA	
Initial	☐	☐	☐	☐	☐	TA : Type Approval
Renewal	☐	☐	☐	☐	☐	MP : Approval of Manufacturing Process
Annual	☐	☐	☐	☐	☐	DA : Design Approval
Change	☐	☐	☐	☐	☐	QA : Approval of Quality Assurance System
Renewal/Change	☐	☐	☐	☐	☐	MA : Approval of Manufacturer
Annual/Change	☐	☐	☐	☐	☐	
Occasional	☐	☐	☐	☐	☐	

1. If you are applying for Renewal, Annual, Change or Occasional, please choose the Certificate number.

2. Where there are alterations to the product or documentation since previous approval contents, please describe details.

Product Information (☐ In case of explosion-proof electric Equip.)

Kind of Product			
Model(Brand) or Grade			
Approval Range			
Date of Approval Test		Date to be Approval	

Korean Register

Application for Approval of Materials and Equipment

Work ID No.		Date of Receipt	

Applicable Standards, Codes and Rules

Please state the standards that the product is to be certified as complying with (e.g. KR Rules), including, where applicable, those which areoffshore or industrial

Installation Location of Electric/Automation System (for Environmental Testing)

- ☐ Controlled environments only, to producer's specification
- ☐ Enclosed spaces subject to temperature, humidity and vibration: 5°C to 55°C
- ☐ Enclosed spaces subject to generated heat from other equipment: 5°C to 70°C
- ☐ Mounted on reciprocating machinery: 5°C to 55°C
- ☐ Open decks: -25°C to +70°C
- ☐ Additional tests e.g. IP65. Please state

Existing Quality System Certification Details

Please provide copy of Certificate(s) as data for reference		
Do you have a current ISO 9001 registration?	☐Yes ☐ No	
If 'Yes' please state	Certification Body	
	Scope of Approval	

Attachments (details can be found on Instruction)

- ☐ Approval Test Plan and applicable Standards(TA, MP)
- ☐ Drawings and Specification(TA, MP, DA)
- ☐ Procedure for maintaining KR Quality Assurance System(QA)
- ☐ Data for reference(TA, MP, DA, QA)
- ☐ Etc

Invoice Charge (☐ Same as above applicant ☐Same as above Factory)

☐ Invoice (Except Korean company)		☐ Tax invoice (incl. VAT)		☐ Tax invoice (excl. VAT)	
BILLING CONTACT : When the billing contact and applicant are different, please fill out the follows.					
Company Name					
Address					
Tel. No.		Fax. No.		Company E-mail	

Korean Register

Application for Approval of Materials and Equipment

Work ID No.		Date of Receipt	

The undersigned hereby requests Korean Register of Shipping to carry out the Approval process for the above mentioned products in accordance with the requirements of the "Rules for Classification, Steel Ships" and/or the "Guidance for Approval of the Manufacturing Process and Type Approval, Etc.", and also agrees to pay all approval fee and expenses which will be incurred in the aforesaid approval.

( ) YY ( ) MM ( )

Applicant

The items in bold line are for KR Surveyor Use.

Cert. No.	
Checklist/Review for Service Request	
Check Items	
☐ Any special information or requirements including MOU or agreement	
☐ The relevant standards in the department's master list. (If not, please state them in the following instruction.)	
☐ This department has the necessary capability. (If not, please state other source(s) in the following instruction.)	
☐ Compliance with the Classification/Statutory requirements.	
Instruction	

Check : "X" as applicable or "-" as not applicable.

Reviewed by (Signature)	

Staff in Charge(Branch)			
Staff in Charge(HDO)			
Staff in Charge(CHN HDO)			

GUIDANCE FOR APPROVAL OF MANUFACTURING PROCESS AND TYPE APPROVAL, ETC.

Published by
KR
36, Myeongji ocean city 9-ro, Gangseo-gu,
BUSAN, KOREA
TEL : +82 70 8799 7114
FAX : +82 70 8799 8999
Website : http://www.krs.co.kr

Copyright© 2017, **KR**
Reproduction of this Guidance in whole or in parts is prohibited without permission of the publisher.